The Right Connection®

Terminal Products

dixonvalve.com

Customer Service
877.963.4966

Dixon® Terminal Products

Various refined petroleum products are distributed through terminals to tank trucks, barges, or railcars. Dixon products are successfully utilized in many of these transfer applications, from dry disconnects and API couplers, to rack cords and vapor recovery couplers.

Table of Contents

Dixon Terminal Illustrations **3-9**
- Terminal process illustration 4-5
- Tank truck: bottom loading/unloading illustration 6-7
- Railcar: top loading illustration 8
- Tank truck: top loading illustration 9

Overfill Protection Systems **10-24**
- FT590-Series terminal test equipment 10
- Junction boxes and cords 11
- Rack monitors 10-11
- ADS Spillguard® System 12-24
  - A100 Outalarm™ with probe 12-13
  - A210 Spillguard systems 14-15
  - Multi-point ultrasonic sensors 16-17
    - Sensor selection guidelines 17
  - Probes: capacitance, conductivity 18-19
  - Gauges, rods, and Spillguard cables 20-21
  - Accessories 22-24
  - ADS tank overfill prevention methods illustration 23

Loading Arm Components **25-36**
- 5500-Series API fittings 25
- Loading arm swivel 26
- TTMA flange extensions; reducing spools 27
- Safety break-away couplings 28-29
- Bayloc® cam and groove style couplers 30-31
- Vapor recovery couplers 32-34
- Vapor recovery coupler handle kits 33
- Bayloc dry disconnect vapor recovery couplers 33
- TTMA Series flange adapters, gaskets 35-36
- Betts Wet-R-Dri valves 36
- TTMA flanged sight flow indicators 36

Loading Arms **37-44**
- Top loading 38
  - Locking mechanism 38
  - Valves and accessories 39
  - Diffusers/T-deflectors 40
- Scissor style 38
- Bottom loading 39
- Base swivels 39
- Legs/spools 39
- Counterbalances 40
- Support braces 41
- Swivels 42-44
  - O-ring, V-ring 43
  - Split flange 44

Our Commitment to the Terminal Market

Through innovation, superior product design, and application expertise our objective is to be the easiest company to do business with in the terminal market. We maintain high inventory levels and strive for short lead times while providing training and support before, during, and after the sale. The on-site training at the end-user level will focus on high-quality manufactured products that extend service life and minimize downtime.

Safety

Dixon® couplings and retention devices are designed to work safely for their intended use. The selection of the proper hose, coupling and retention device, and the proper application of the coupling to the hose, are of utmost importance. Users must consider the size, temperature, application, media, pressure, and hose and coupling manufacturer's recommendations when selecting the proper hose assembly components. Dixon recommends that all hose assemblies be tested in accordance with the Association for Rubber Products Manufacturers' (ARPM) recommendations and be inspected regularly (before each use) to ensure that they are not damaged or have become loose. Visit arpminc.com for more information.

Where safety devices are integral to the coupling, they must be working and utilized. The use of supplementary safety devices such as safety clips or safety cables are recommended.

If any problem is detected, couplings must be removed from service immediately.

Dixon is available to consult, train, and recommend the proper selection and application of all fittings we sell. We strongly recommend that distributors and end users make use of Dixon's testing and recommendation services. Call 877.963.4966 or visit dixonvalve.com to learn more.

Terminal Process

The illustration below provides a general overview of the terminal process.

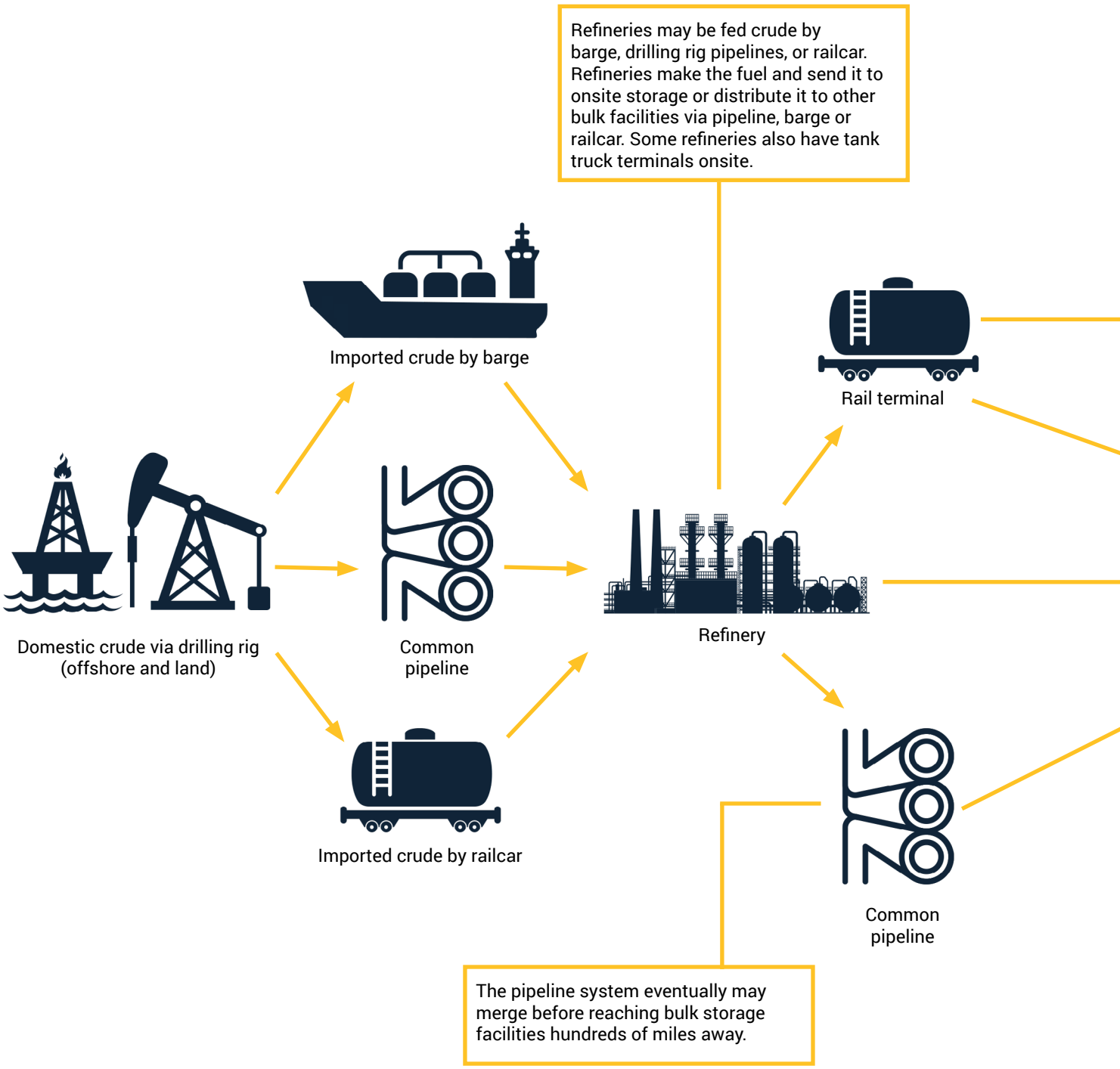

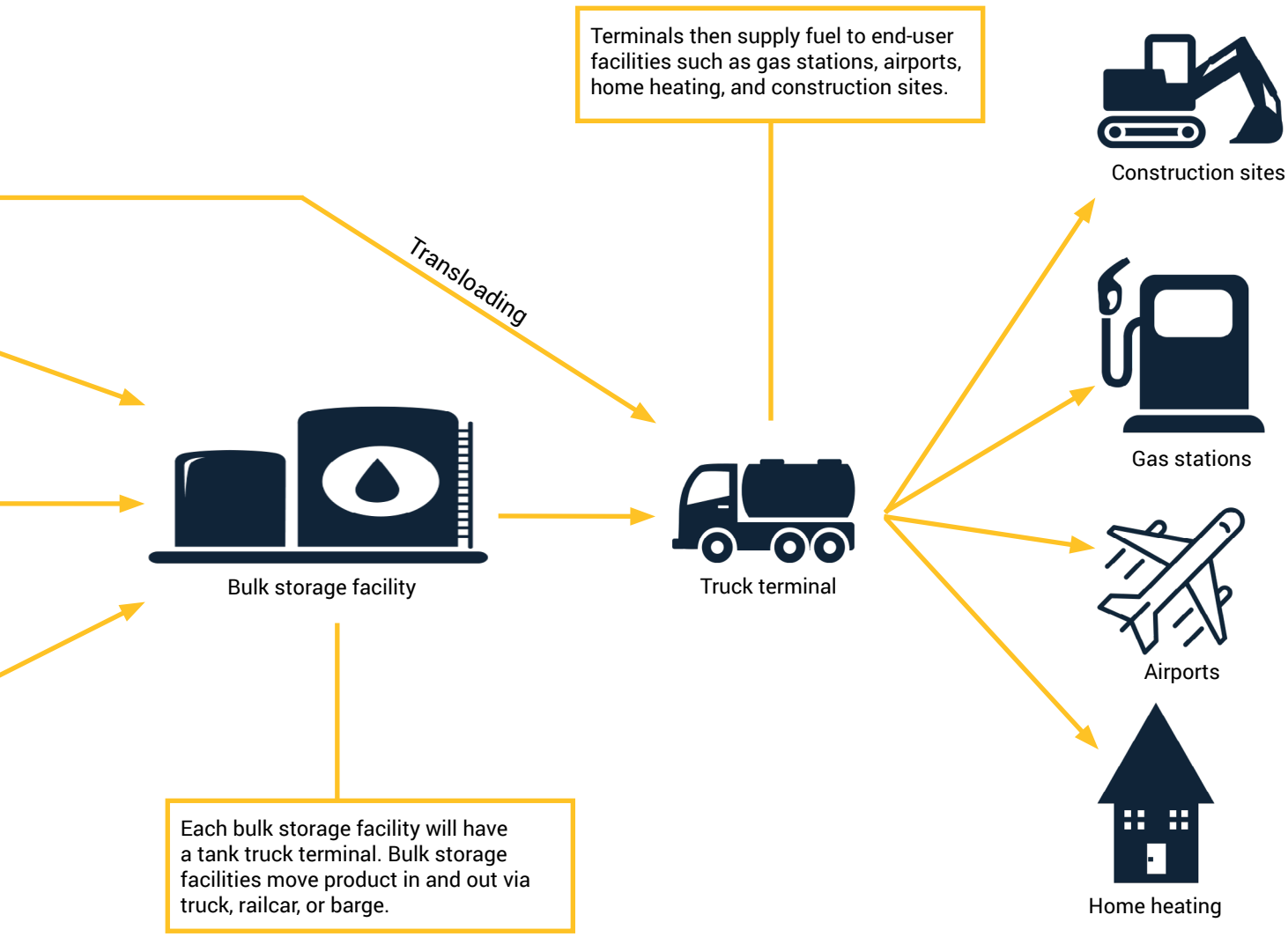
Terminals then supply fuel to end-user facilities such as gas stations, airports, home heating, and construction sites.
Construction sites
Transloading
Gas stations
Bulk storage facility
Truck terminal
Airports
Each bulk storage facility will have a tank truck terminal. Bulk storage facilities move product in and out via truck, railcar, or barge.
Home heating

Tank Truck: Bottom Loading/Unloading

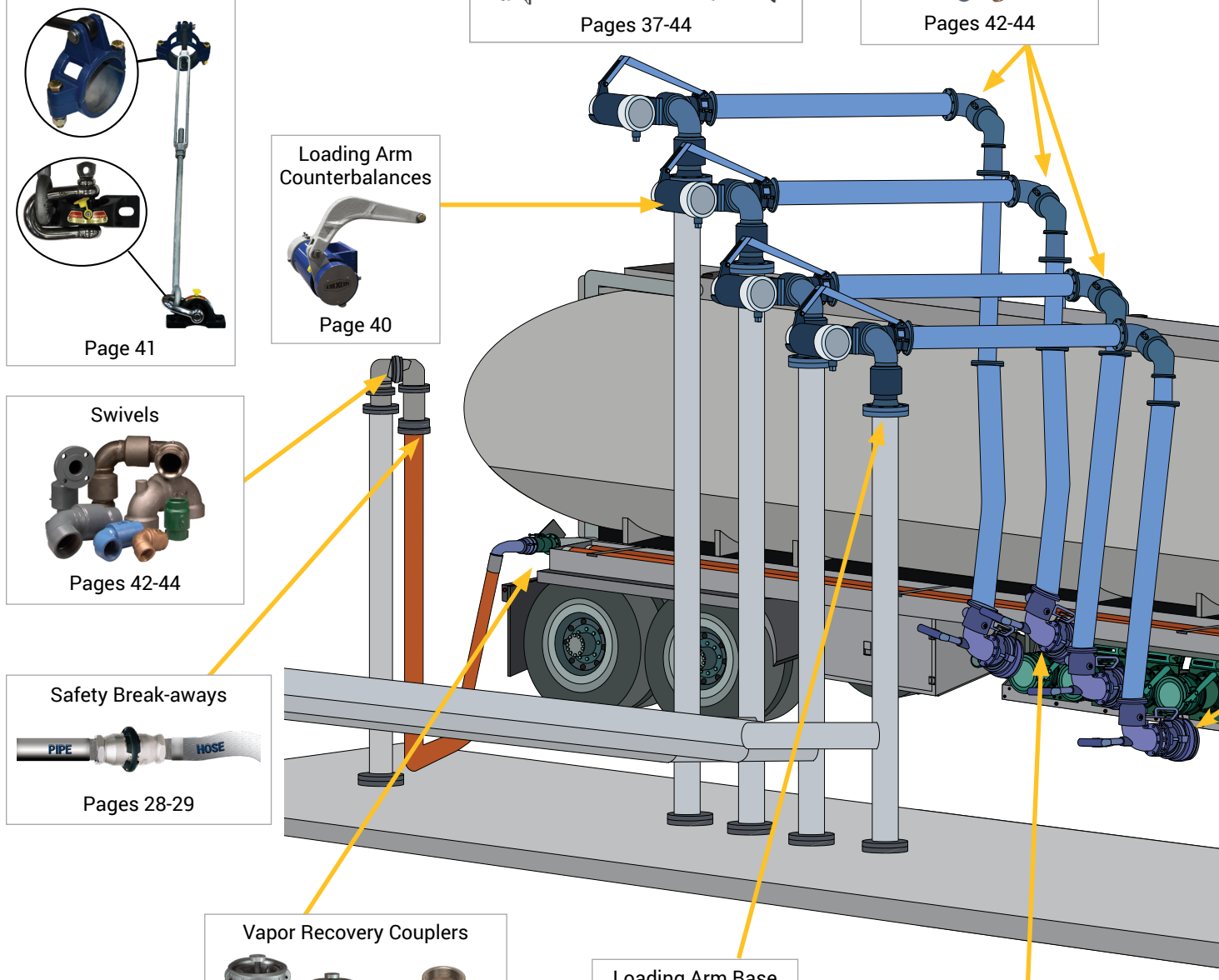

Loading Arms

Pages 37-44

Swivels

Pages 42-44

Loading Arm Support Braces

Page 41

Loading Arm Counterbalances

Page 40

Swivels

Pages 42-44

Safety Break-aways

Pages 28-29

Vapor Recovery Couplers

Pages 32-34

Loading Arm Base Swivels

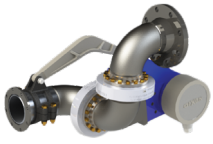

Page 39

Loading Arm Swivels

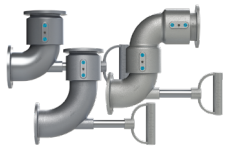

Pages 26, 37

Tank Truck: Bottom Loading/Unloading

Sight Flow Indicators

Page 36

TTMA Flanged Break-away Couplings

Pages 28-29

TTMA Flange Adapters

Page 35

TTMA Flange Extensions

Page 27

API Couplers

Page 25

Flange Spacers and Gakets

Pages 35-36

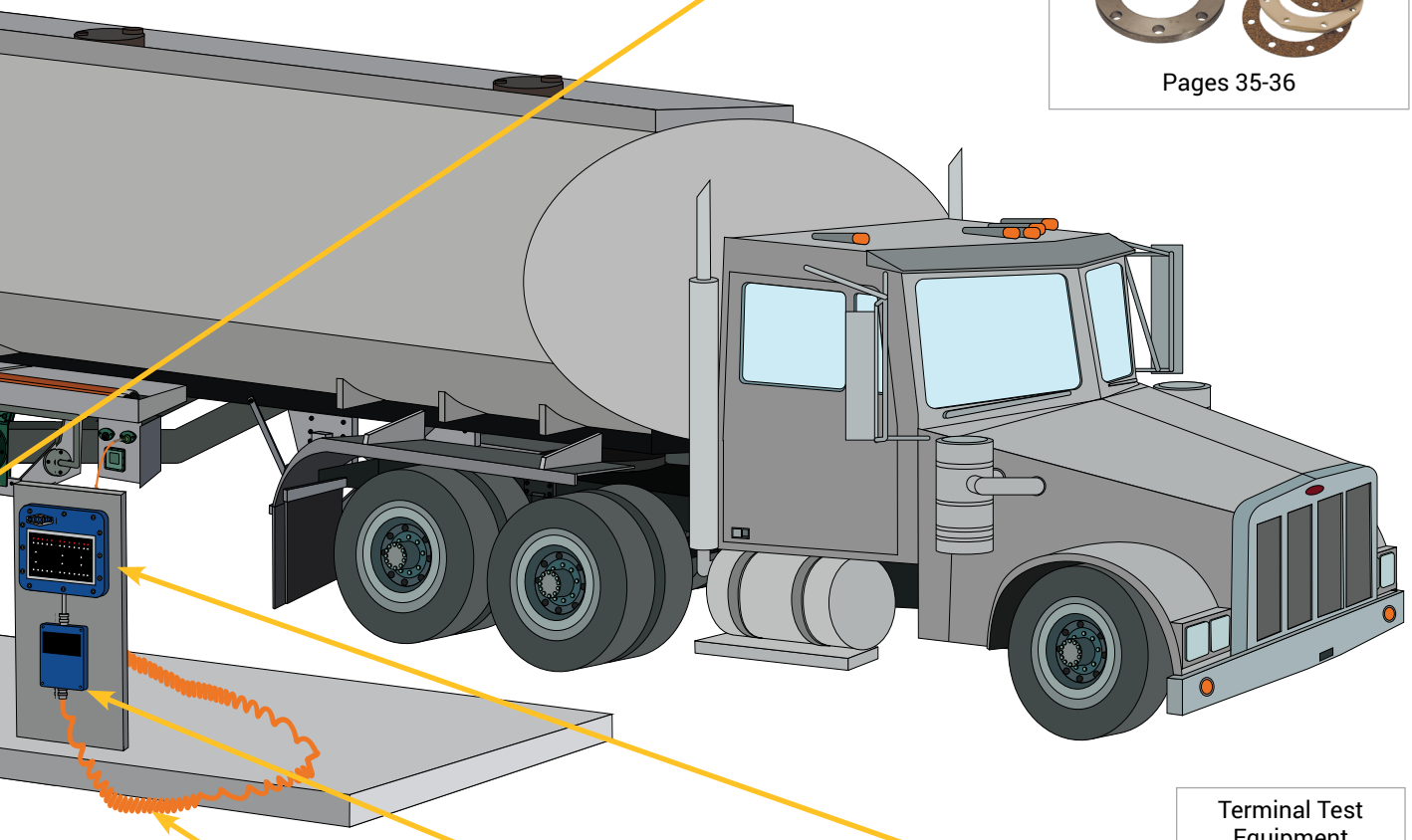

API Optic and Thermistor Cord Assemblies

Page 10

Junction Boxes

Page 10

Rack Monitors

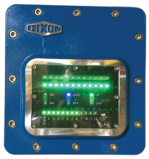

Pages 10-11

Terminal Test Equipment

Page 11

Railcar: Top Loading

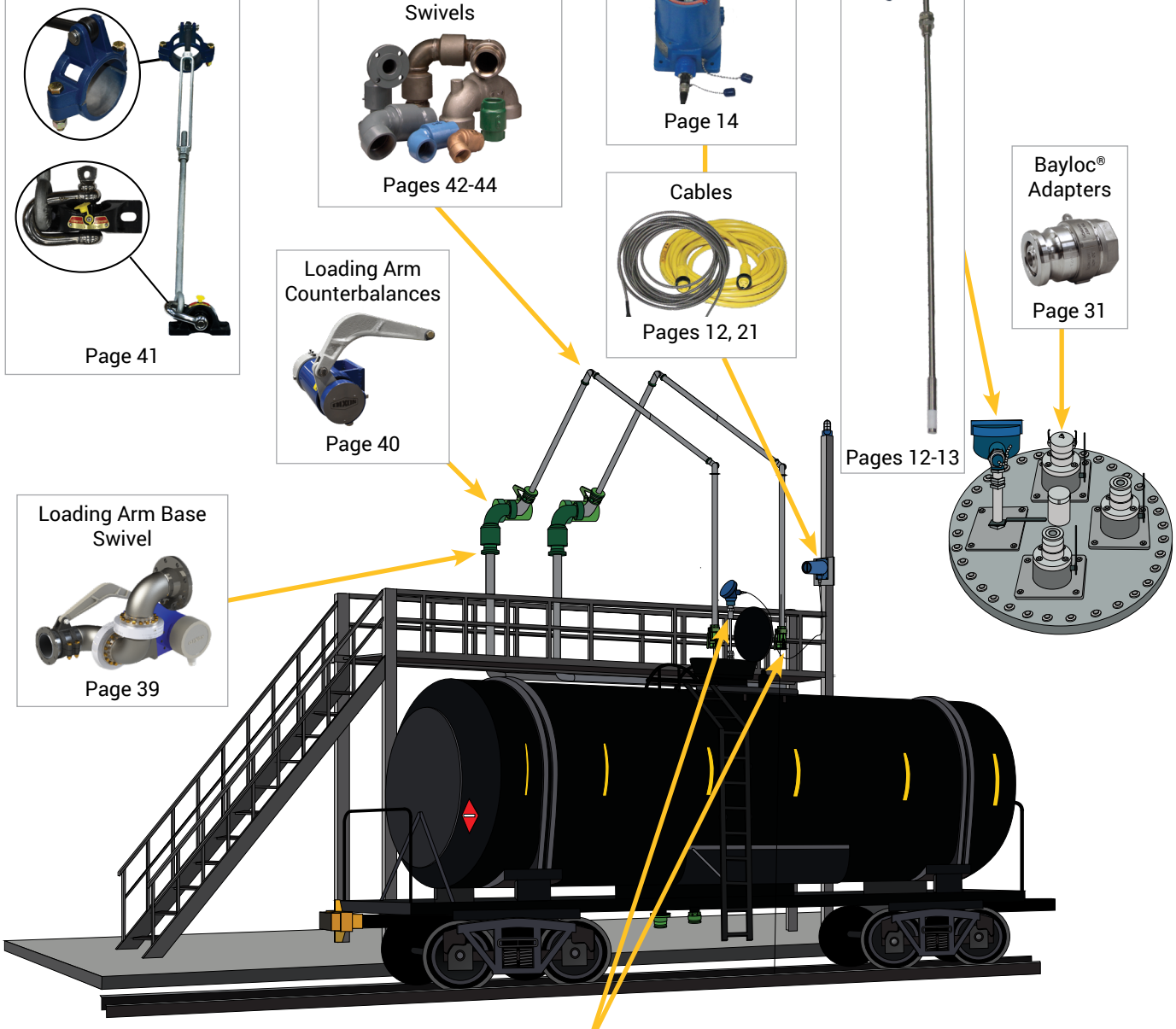

Tank Truck: Top Loading

Loading Arm Support Braces

Page 41

Swivels

Pages 42-44

Overfill and Ground Verification Monitor

Page 14

Cables

Pages 12, 21

Bayloc® Adapters

Page 31

ADS Probes

Pages 12-13

Loading Arm Counterbalances

Page 40

Loading Arm Base Swivels

Page 39

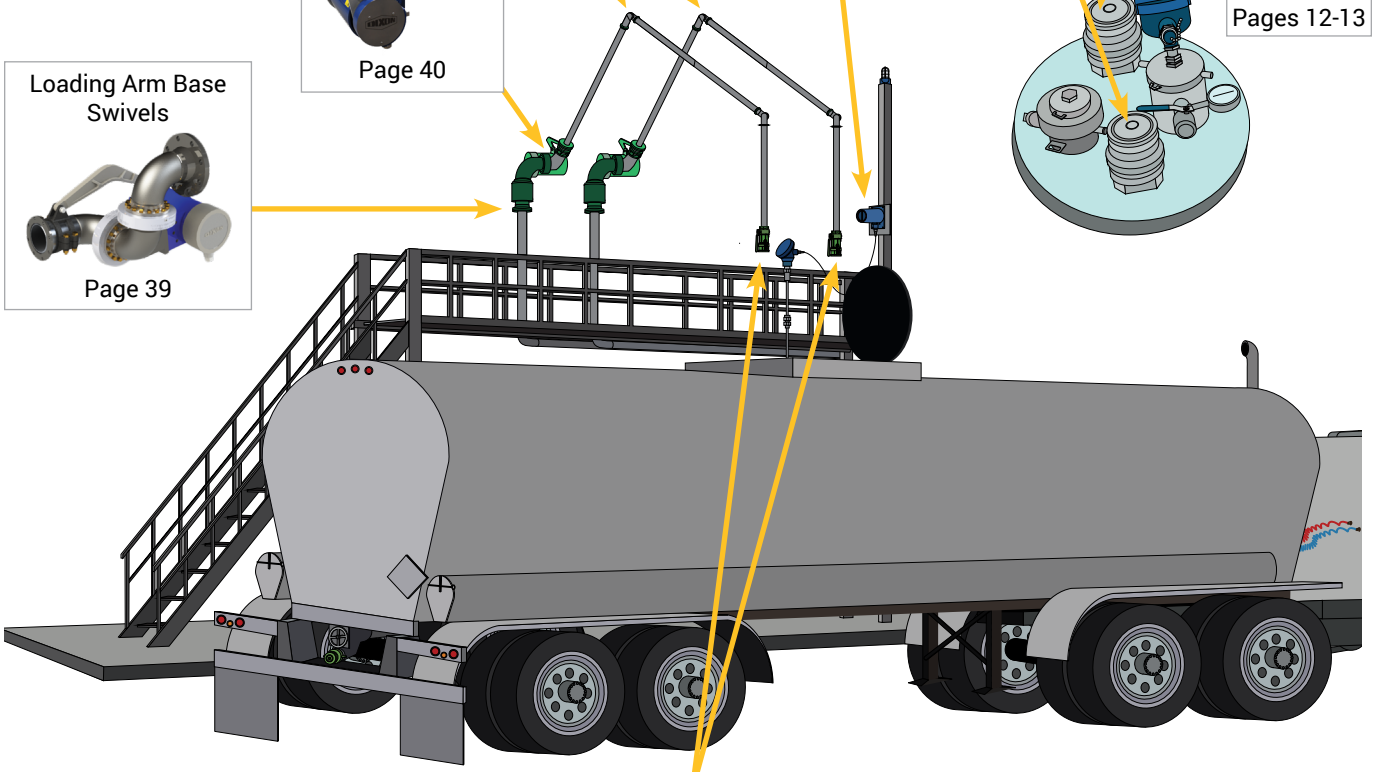

TTMA-Flanged Break-away Coupling

Pages 28-29

Bayloc® Dry Disconnects

Page 30

Overfill Protection Rack Monitors

Rack Monitor System

Rack Monitor
(FT7000)

Application
- Installed on the gantry to control the loading process of petroleum fuels or other hazardous liquid into cargo tanks

Features
- Automatically switches between 2-wire or 5-wire type sensors
- Compatible with analog 2-wire thermistor type sensors
- Redundant relay outputs prevent single point failures
- Data management via RS485 port
- Wireless bypass key system
- Ground verification
- Reads trailer identification modules

Approvals
- Meets API RP1004 and EN13922 standards
- Suitable for Class I, Division 1, Group CD and Class I, Zone 1, and Group IIB

FT590 Series Terminal Test Equipment

FT590OG

FT590TG

FT530

Applications
- Verifies terminal overfill monitor performance and read the trailer identification modules
- Displays the unique serial number you need to enter into the terminal automation system

Features
- Rack monitor testers and mini trailer overfill system have the same API compatible signals
- When connected to the API plug it will cause the terminal overfill monitor to switch permissive
- Tester contains a liquid level sensor, API compatible socket, ground bolt, and trailer identification module, all wired into one unit
- Flotech® FT530 is a self contained microprocessor capable of reading the serial number embedded into the trailer identification module located in the trailer socket

Description	Part #
rack tester thermistor with ground bolt	FT590TG
rack tester thermistor with ground bolt and trailer identification module	FT590TGT
rack tester optic with ground bolt	FT590OG
rack tester optic with ground bolt and trailer identification module	FT590OGT
trailer identification module reader	FT530

API-Compatible Systems

Features
- Plug is color-coded (5-wire optic) blue or (2-wire optic / thermistor) green
- Highly visible safety orange jacket to meet trip hazard requirements
- Cord is bonded mechanically and resistant to abrasion and oil
- Cord sets are interchangeable with Scully and Civacon
- All wiring is compatible with standard Scully color codes and wiring number configurations
- The 9-pin conductor is shielded to be compatible with Scully VIP system
- For mating socket, consult Dixon®

Materials
- Plug body: reinforced nylon
- Button contacts: 316 stainless steel
- All other hardware: stainless steel

FT7500

FT7501

FT7502

Order Guide

Part #	Rack Monitor Description
FT7000	rack monitor, auto switch between 2-wire / 5-wire sensors, ground verification, and trailer identification modules; API RP 1004 / EN13922
	Safe-T Connect Junction Box Description
FT7600	8-pin, 2J, green API plug, and 30' safety orange coiled cable
FT7600-4	8-pin, 4J, green API plug, and 30' safety orange coiled cable
FT7600C	10-pin, 4J, green API plug, and 30' safety orange coiled cable
FT7600P	8-pin, 2J, green API plug, 30' safety orange coiled cable, and Plug-n-Play connector
FT7600S	8-pin, 2J, green API plug, and 20' safety orange straight cable
FT7620	6-pin, 3J, blue API plug, and 30' blue coiled cable
FT7620P	6-pin, 3J, blue API plug, 30' blue coiled cable, and Plug-n-Play connector
FT7620S	6-pin, 3J, blue API plug, and 20' blue straight cable
FT7630	10-pin, 4J, black plug per EN13922, and 30' blue shielded coiled cable
FT7630D	10-pin, 4J, black plug per EN13922, and 30' blue shielded coiled cable with Dixon Bayco break-away
	Junction Box Description
FT7500	single cord junction box
FT7501	dual cord junction box
FT7502	junction box with Cole Hersee yellow 13-pin break-away
FT7503	junction box with D-type pigtail break-away
	Rack Cord Description
FT600	8-pin, 2J, API thermistor plug, and 30' safety orange coiled cable
FT600-4	8-pin, 4J, API thermistor plug, and 30' safety orange coiled cable
FT600C	10-pin, 4J, API thermistor plug, and 30‘ safety orange coiled cable
FT600P	8-pin, 2J, API thermistor plug, and 30' safety orange coiled cable with 13-pin Plug-n-Play
FT600S	8-pin, 2J, API thermistor plug, and 20' safety orange straight cable
FT620	6-pin, 3J, API optic plug, and 30" blue coiled cable
FT620P	6-pin, 3J, API optic plug, 30' blue coiled cable and Plug-n-Play connector
FT620S	6-pin, 3J, API optic plug, and 20' blue straight cable
FT630	10-pin, 4J, black plug per EN13922, and 30' blue shielded coiled cable
FT630D	10-pin, 4J, black plug per EN13922, 30' blue shielded coiled cable, and Dixon Bayco break-away

FT600

FT620

FT600P
with 13-pin plastic

FT620P
with J560 aluminum

A100 Outalarm®
Self-Contained Portable Outage Alarm

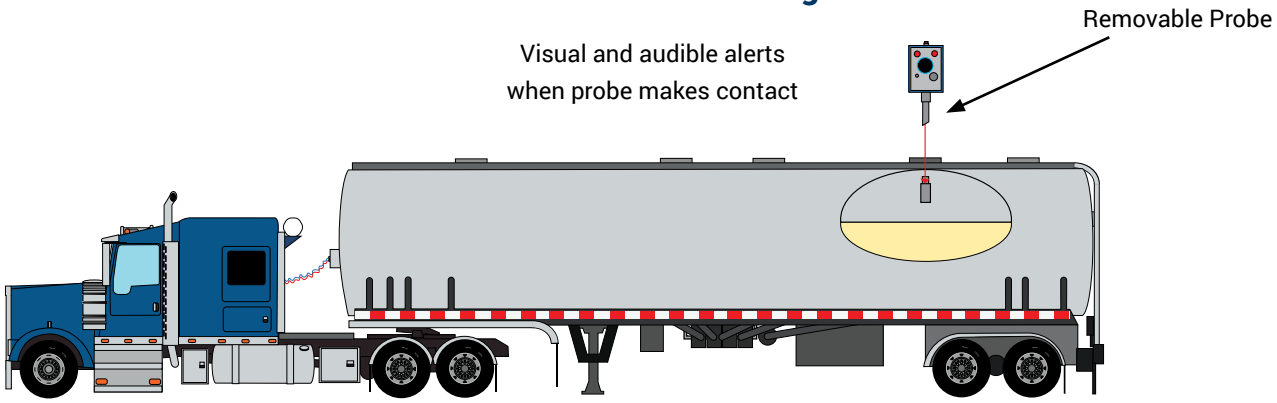

Mobile Tank Gauging with Remote A100 Monitor

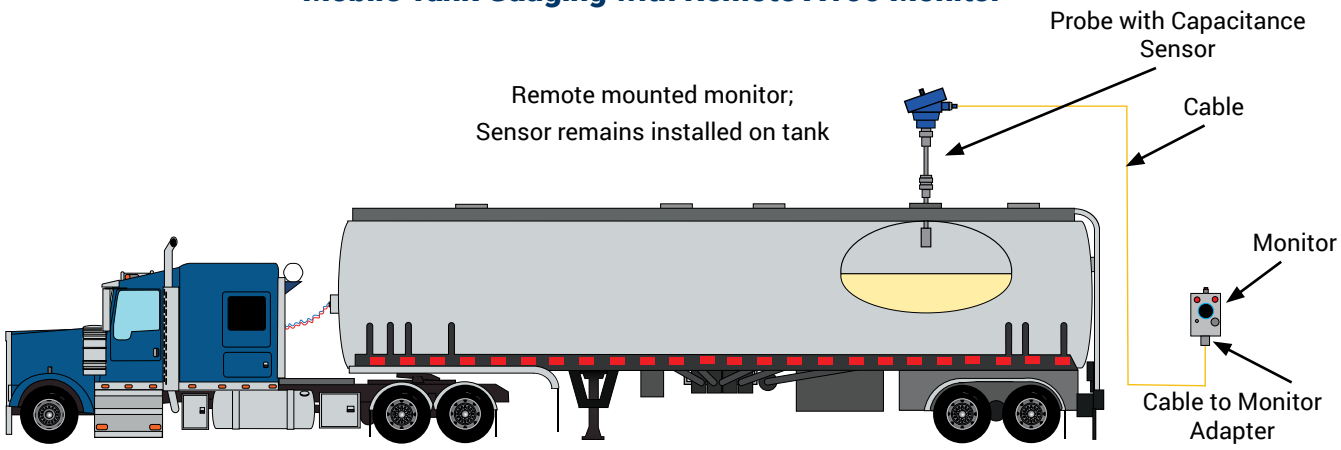

Probe with Capacitance Sensor
A200PC24A

Cable
A200CB3P25

Cable to Monitor Adapter
A100CBLMTR

Monitor
A100MTR

Applications

- Petroleum products: gasoline, diesel, kerosene, and jet fuel
- Bio-diesel
- Water-based products
- Water/petroleum waste
- Ether
- Esters
- Surfactants
- Sulfuric acid
- Amines
- Molten sulfur
- Sodium hydroxide
- Methyl diphenyl diisocyanate (MDI)
- Vinyl chloride monomer
- Alcohol and methanol
- Brine

NOTE: Capacitance probes work with all liquids with dielectric constant 1.8 or higher. Visit dixonvalve.com/ads for a list of dielectric constants for various chemicals.

A100 Outalarm® with Probe

Dixon® ADS industrial fluid control* manufactures products specifically designed for liquid terminal operations. Our standard product offering is shown on the following pages. However, there are numerous additional applications, materials, and custom designs available. For technical information or assistance with ordering these products, please call 513.874.8499 or 877.582.3569 or visit dixonvalve.com/ADS.

*Formerly Automated Design Service, Inc. (ADS)

Application
- Specifically designed for liquid terminal operation on batch loading and overfill protection, tank cars, tanks trucks, marine barges; suitable for open and closed domes

Sizes
- 24", 36", 48", and 60" probe lengths standard, other lengths available

Features
- Totally self-contained; no wires, tubing, or external power
- Rugged weather- and corrosion-resistant construction
- No moving parts, tip sensitive phase shift digital capacitance sensor for conductive and non-conductive fluid; conductivity sensor available for conductive fluids
- Requires no calibration or adjustment
- Adjustable insertion length through a standard ½" NPT fitting
- High-intensity audible and flashing visual outputs
- Optional opto-isolated solid state contact output
- Full, hard, graduated, laser-engraved rod
- A100 operates up to 2,500 hours on a single 9V alkaline battery in standby mode
- Fail-safe, continuous battery monitor goes to alarm state on low battery
- Battery current drain <0.23 mA during standby; <60 mA in alarm state

Materials
- Wetted materials: 316 stainless steel, PTFE standard, other materials available

Specifications
- Minimum dielectric constant: 1.8
- Temperature range:
  - capacitance probe: -**14°F** to **250°F (-26°C** to **121°C)**
  - high-temp capacitance probe: -**14°F** to **325°F (-26°C** to **163°C)**
  - Outalarm® monitor: **-40°F** to **150°F (-40°C** to **65°C)**
- Activation point: ¼" into liquid surface
- Compatible with any liquid or dry bulk material with a dielectric constant of 1.8 or greater
- Horn intensity: 101 dB at 2'
- Light output: three each 3,000 mcd high-intensity red flashing LEDs
- Pressure rating on standard unit: **50 PSI**; consult Dixon for applications up to **300 PSI**

Approvals
- Intrinsically safe design per ANSI/UL913 for Class I, Div I Groups A, B, C, and D Hazardous Areas

A100 Capacitance Probe

A100 Probe

Length	Capacitance 250°F (121°C) Max Part #	Hi-temp Capacitance 325°F (163°C) Max Part #	Conductivity for Conductive Fluids* Part #
12"	A100C12A	A100HC12A	A100CSS12A
24"	A100C24A	A100HC24A	A100CSS24A
36"	A100C36A	A100HC36A	A100CSS36A
48"	A100C48A	A100HC48A	A100CSS48A
60"	A100C60A	A100HC60A	A100CSS60A
72"	A100C72A	A100HC72A	A100CSS72A
84"	A100C84A	A100HC84A	A100CSS84A

*Material to be sensed must be specified at time of order.

A210 ADS Spillguard® System

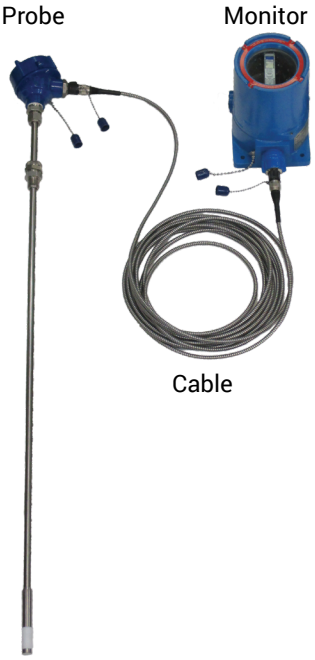

Applications
- Shutdown and alarm system for tank cars, tank trucks, barges, and ships
- Suitable for open and closed domes

Sizes
- Standard cable lengths: 15', 25', and 50', other lengths available
- Insertion lengths: 4" to 60" standard, other lengths available

Features
- Rugged, explosion-proof, weather-, chemical-, and corrosion-resistant
- LED status lights visible through glass cover
- Inserts into tank through standard ½" NPT fitting
- Probe can be portable or permanently installed in the vessel
- Laser engraved graduated rod with ¼" graduations
- Probe-to-controller cable protected by stainless steel interlocking armor sheath and heavy-duty latching connectors at both ends
- Fail-safe design, unit trips in the event of an open or shorted cable or loss of power
- Choice of capacitance, conductivity, or single-point ultrasonic sensors
- Input power: 120 VAC, 240 VAC, or 24 VDC, 2.5 watts
- Output relay de-energizes on high level, broken or shorted sensor cables, or loss of power
- Sensor excitation open circuit voltage 8 VDC, short circuit current 8 mA with built-in FM-approved barrier
- Optional self-test feature, tilt and ground verification interlocks, and latching circuit available

Materials
- Wetted materials: 316 stainless steel and PTFE standard, other materials available
- Controller housing: NEMA 4X, NEMA 7, Explosion Proof, Class I, II, Groups B, C, and D

Specifications
- Minimum dielectric constant: 1.8
- Temperature range:
  - capacitance probe: **-14°F** to **250°F** (**-26°C** to **121°C**)
  - high-temp capacitance probe: **-14°F** to **325°F** (**-26°C** to **163°C**)
  - Probe pressure rating: **50 PSI** with standard fitting; consult Dixon for applications up to **300 PSI**
- Sensor suitable for Class I, II, III, Div 1, Groups A, B, C, and D when used with supplied controller and cable lengths of 10,000' or less
- Output relay dry contacts 2 form C (2PDT) rated 2 amps at 120/240 VAC, 1 form C (SPDT) with optional latching circuit and reset switch

Approvals
- Cable connectors designed for repeated mating meet IP 65 mechanical and environmental specifications
- FM, CSA HAZ Loc Class I Div I, Groups B, C, and D

A210 Spillguard® Monitors

Monitor Options	24V DC Part #	120V DC Part #
A210 Spillguard® monitor	A210-24	A210-120
with bypass timer	A210B-24	A210B-120
with external reset switch	A210R-24	A210R-120
dual channel control monitor	A212-24	A212-120

A210 ADS Spillguard® System

A210 Spillguard® System Wiring

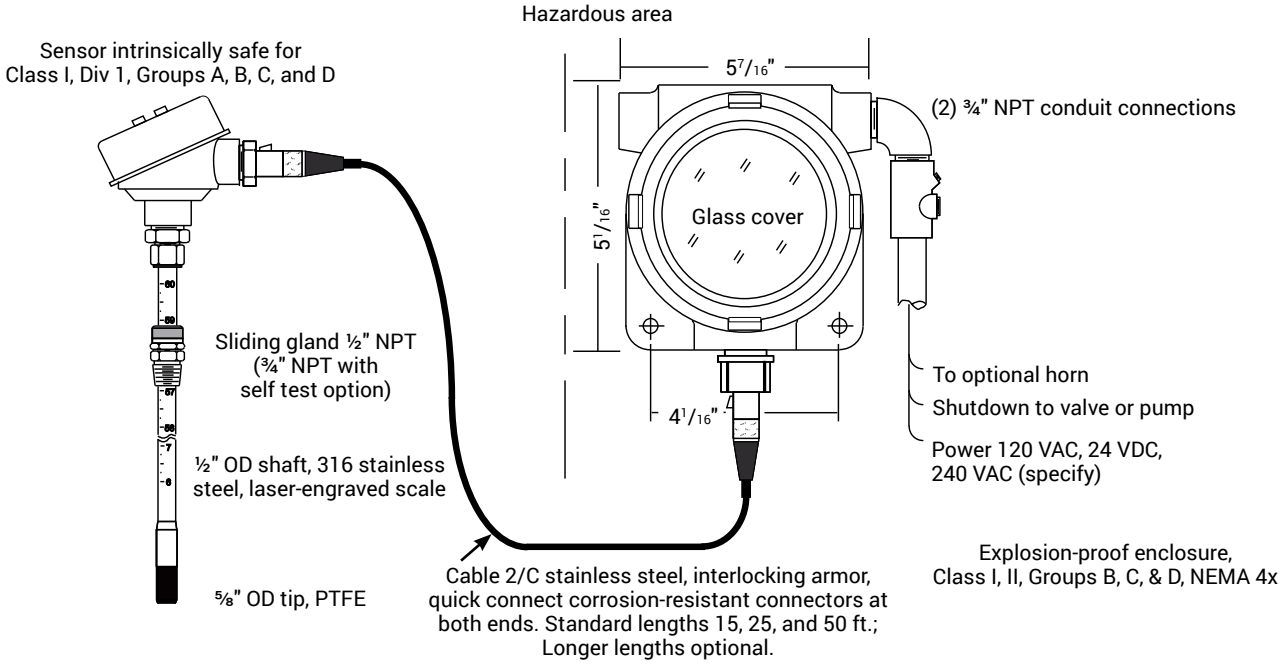

Special applications and custom-engineered solutions available

- Multiple sense points
- Control systems
- Special sensor configurations

Call technical support: 877.582.3569

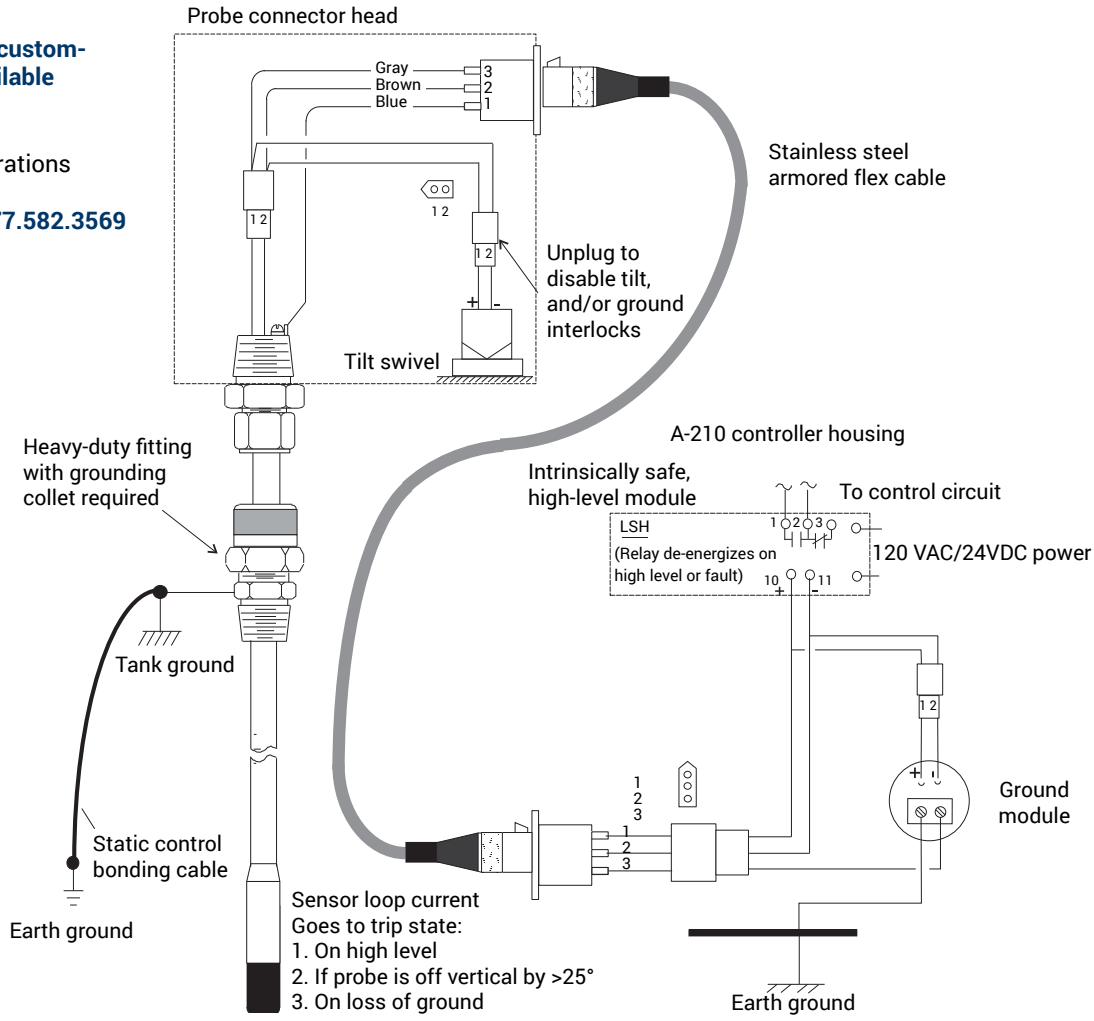

ADS Multi-Point Ultrasonic Sensors

Application
- For use when multiple detection points are required, such as dribble mode, pump shutoff, and overfill alarm

Features
- Intrinsically safe design class I, Div 1, Groups A, B, C, and D
- Up to five detection points available
- Rugged "tube in tube" ultrasonic sensor welded construction
- Individual level and pressure outputs
- Silicon strain gauge pressure transducer available, welded diaphragm, 0-50 PSIA standard range, single or dual set points, trip Hi, Lo, or outside of gap
- Tilt storage indicator option
- Ground verification option
- Full hard heavy wall probe shaft, laser engraved scale up to 86" long

Material
- Wetted material: 316 stainless steel

Specification
- Operating temperature range: **-40°F (-40°C)** to **250°F (121°C)**

Example:
3-Point Ultrasonic Sensor

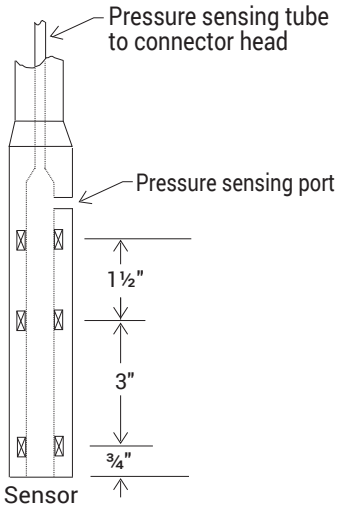

Ordering Guide

Part Number Breakdown
Example: A330U 36 P T 2 xxxxx

Product Line	Sensor Length	Pressure Option	Tilt Option	Liquid Sensor Points*	Dixon Assigned #
A330U Ultrasonic sensor	08 - 8" 12 - 12" 13 - 13" 24 - 24" 26 - 26" 36 - 36" 48 - 48" 60 - 60"	P - Pressure	T - Tilt	1 - 1 detection point 2 - 2 detection points 3 - 3 detection points 4 - 4 detection points 5 - 5 detection points	Custom assigned number by Dixon

*NOTE: Consult Dixon® for distance between sensor points. Probes with three or more detection points require custom monitors.

Sensor Selection Guidelines

Capacitance

- Capacitance probes work with all liquids with a dielectric constant minimum of 1.8 or higher
- Temperature does affect the dielectric constant
- Solution and chemical compatibility to be monitored also need to be considered
- Some high-viscosity, sticky material may adhere to the sensor and cause sensor to read wet

Ultrasonic

- For multi-point applications; up to five sense points
- Ideal for areas where splashing is a problem
- Pressure sensing options available; specify pressure at time of order

Conductivity

- All conductivity probe orders must include product used and/or specific tuning requested. Standard conductivity tuning is 200K Ohm.
- These two liquids are the most common for conductivity probe use:
  - Alcohol: Low in conductivity, requires 2 megOhm tune
  - HCL: High in conductivity requires 10K Ohm tune 1
- 1 HCL fumes are very invasive. Capacitance sensors not recommended. Use conductivity sensors only ⚠
- Conductivity probes are an alternative to capacitance probes if the liquid is conductive and there is risk of the capacitance probe being falsely tripped from splashing
- Dual electrode conductivity probes are good for liquids that may stick to the electrode. The exposed electrodes can easily be wiped off between loads.
- There are always exceptions to these basic guidelines. Please call technical support at 877.963.4966 if you have any questions regarding your application.

ADS Spillguard® Probes

Capacitance Probes

Application
- For materials with dielectric constant > 1.8; liquids, powders, slurries

Features
- ½" NPT sliding fitting standard, ¾" fitting optional
- Open dome adapter and washout fitting available
- Tilt sensor optional

Materials
- Probe: 316 stainless steel
- Housing: NEMA 4X, IP66

Specifications:
- Capacitance probe: **250°F (121°C)** maximum
- High temperature capacitance probe: **325°F (163°C)** maximum

Length	Capacitance	
	Capacitance Part #	High-Temp Part #
12"	A200PC12A	A200PHC12A
24"	A200PC24A	A200PHC24A
36"	A200PC36A	A200PHC36A
48"	A200PC48A	A200PHC48A
60"	A200PC60A	A200PHC60A
72"	A200PC72A	A200PHC72A
84"	A200PC84A	A200PHC84A

Conductivity Probes

Application
- For conductive fluids such as acids and water-based mixtures

Features
- ½" NPT sliding fitting standard, ¾" fitting optional, **50 PSIG, 150 PSIG,** or **300 PSIG** fittings available
- Open dome adapter and washout fitting available
- Tilt sensor option
- Single electrode protected in housing
- Dual electrodes exposed for easy cleaning

Materials
- Probe: 316 stainless steel, Hastelloy available for HCL service
- Housing: NEMA 4X, IP66

Length	Conductivity	
	Single Electrode Part #	Dual Electrode Part #
12"	A200PCSS12A	A200PCSSDP12A
24"	A200PCSS24A	A200PCSSDP24A
36"	A200PCSS36A	A200PCSSDP36A
48"	A200PCSS48A	A200PCSSDP48A
60"	A200PCSS60A	A200PCSSDP60A
72"	A200PCSS72A	A200PCSSDP72A
84"	A200PCSS84A	A200CPSSDP84A

Material to be sensed must be specified at time of order

Dielectric Constants for Common Materials

Fluid	Dielectric Constant
Acetal	3.8
Acetaldehyde	15
Acetamide	59.2
Acetic acid	6.2
Acetone	20.7
Acetophenone	18
Acetyl bromid	16.2
Acetyl chloride	15.9
Acetylacetone	23
Acetylene dibromide	7.2
Acetylene tetrabromide	5.6
Aconite acid ester	6.3
Adipic acid	1.8
Aerosile	1
Aether	4
Alcohol, allyl	20.6
Alcohol, cetyl	3.6
Alcohol, diacetone	18.2
Alcohol, ethyl (ethanol)	24.3
Alcohol, methyl (methanol)	33.1
Alcohol, propyl	21.8
Allyl chloride	8.2
Allyl iodide	6.1
Aluminum bromide	3.4
Ammonia	15
Ammonia solution 25%	31.6
Amyl amine	4.5
Aniline	7.3
Anisole	4.5
Antimony hydride	1.8
Argon	1.5
Arsine	2.1
Arsole	2.3
Azoxybenzene	5.2
Benzene	2.3
Bromine	3.1
Butane	1.4
Butanoic acid	3
Caproic acid	2.6
Caprylic acid	2.5
Carbon disulfide	2.64
Carbon tetrachloride	2.23
Castor oil	4.7
Chlorine, chlor fluid	2
Chlor benzene	5.7
Chloroform	4.8
Coconut oil, refined	2.9
Cotton seed oil	3.1
Cresol	10.6
Cumene	2.4
Decane	2
Diesel oil, fuel	2.1
Dodecane	2
Ether	4.3

Fluid	Dielectric Constant
Ethylamine	6.3
Ethylene glycol	37
Fish oil	2.6
Fluorobenzene	6.4
Furan	3
Furfural	42
Gasoline, gas	2
Glycerine	47 - 68
Glycerol	42.5
Glycerol water	37
Glycol	37
Heptane	1.9
Hexane	2
Hexanol	13.3
Hydrazine	52
Iodine	11.1
Isopropanol	18
Jet fuel	1.7
Kerosene	1.8
Linoleic acid	2.6 - 2.9
Linseed oil	3.2 - 3.5
Methane	1.7
Napthalene	2.5
Octane	2
Oil	2
Olive oil	3.1
Oxygen	1.51
Palmitic acid	2.3
Palm seed oil	1.8
Paraffin	1.6
Pentane	1.8
Phenol	4.3
Pentanol	14.8
Phosgene	4.7
Phosphorus liquid	3.9
Pinene	2.7
Propane	1.6
Propanol, propyl alcohol	2.2
Propylene	11.9
Propylether	3.3
Pyridine	1.12
Resorcinol	3.2
Stearic acid	2.3
Styrene	2.4
Terpinene	2.7
Toluene	2.0 - 2.4
Transformer oil	2.1
Turpentine (wood), white spirit	2.2
Vinegar	24
Water	10
Water, demineralized	29.3
Water, heavy	78.3
Water - oil emulsion	24
Wine	25

NOTE: A comprehensive list is available on dixonvalve.com.

ADS Outage Gauges

outage gauge with J bar

standard outage gauge

Applications
- Set level fill point for manual/visual fill control
- Measure outage requirements on mobile tanks

Feature
- Open dome bracket

Material
- 316 stainless steel

Length	Standard Outage Gauge Part #	Outage Gauge with J Bar Part #
2'	A800OG2	A8000GJ2
3'	A800OG3	A8000GJ3
4'	A800OG4	A8000GJ4
5'	A800OG5	A8000GJ5

Setting Outage on Closed Dome with A100LT Locating Tab

1. Screw washout adapter onto washout nozzle.
2. Withdraw gauge rod until tab touches inside shell of tank. Note reading on rod.
3. Add desired outage to reading and push down rod to the calculated reading.
4. The probe sensor is now at the desired outage.

Setting Outage on Open Dome Operation

1. Clamp bracket to vertical section of dome.
2. Withdraw gauge rod until bar touches inside shell of tank. Note reading on rod.
3. Add desired outage to reading and push down rod to the calculated reading.
4. The bar is now at the desired outage.
5. For tanks with man-way protruding past shell, use J-bar gauge.

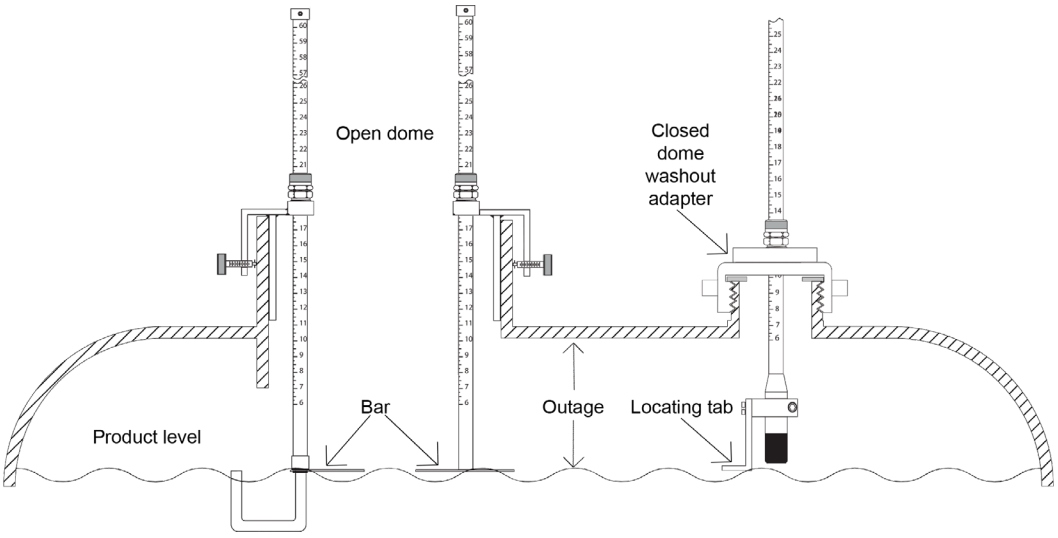

ADS Gauge Rods

Application
- Used to gauge liquid levels in any mobile tank

Size
- ½" x .065 weight

Features
- Laser engraved scale with ¼" graduations
- Rods come in two sections that screw together at the midpoint
- Foot marks inscribed on rod at 1' intervals below the inch mark
- Heavy-duty plastic handle

Material
- 316 stainless steel

Laser Engraving Close-Up

Description	Part #	Part # w/sliding innage bar
gauge rod, 4' length, one piece	ADS4GR	ADS4GR-IB
gauge rod, 8' length, two piece	ADS8GR	ADS8GR-IB
gauge rod, 12' length, two piece	ADS12GR	ADS12GR-IB

ADS Spillguard® Cables

Features
- 3- or 5-pin connector
- 316 stainless steel armoured cable or yellow rubber cable
- Custom lengths available, call 877.582.3569 for more information

Armored Cables

Length	3-Pin Part #	5-Pin Part #
15'	A200CA3P15	A200CA5P15
20'	A200CA3P20	A200CA5P20
25'	A200CA3P25	A200CA5P25
50'	A200CA3P50	A200CA5P50

Rubber Cable*

Length	3-Pin Part #
25'	A200CB3P25
30"	A200CB3P30

*NOTE: For use with (-M) mini connectors only.

ADS Open Dome Adapters

A100DA

Features
- Flexible design fits most domes
- ½" and ¾" NPT port for Outalarm™ probes

Material
- Stainless steel

NPT Size	Part #
½"	A100DA
¾"	A100DB

Tank Washout Caps

A100TTA

Description	Part #
tank truck 3" wash-out adapter, ½" NPT	A100TTA
tank truck 3" wash-out adapter, ¾" NPT	A100TTB
washout cap with swivel	A200SA
washout cap with swivel and 2" vent	A200SVA

A200SA

Cable Junction Boxes

A210CR-3

Description	Part #
3-Pin	A210CR-3
5-Pin	A210CR-5

A210 Pezio Horn

A210PZH-24

Description	Part #
A210 Pezio horn 24V DC	A210PZH-24
A210 Pezio horn 120V AC	A210PZH-120

Signal Light

A210-12TC

Description	Part #
tri-color external signal light 24V DC	A210-24TC
tri-color external signal light 120V AC	A210-120TC

ADS Tank Overfill Prevention Methods

Manual Operator Gauging

A800OG4

ADS12GR

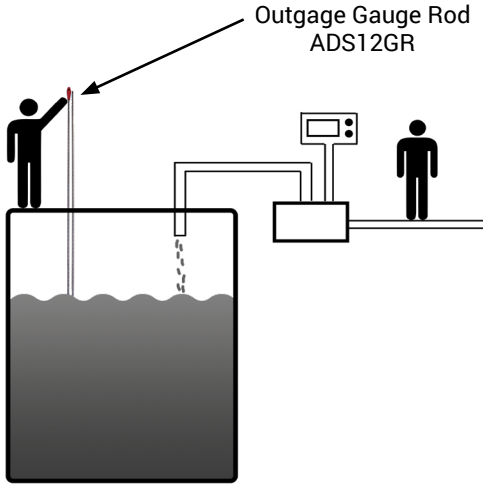

Overfill Alarm

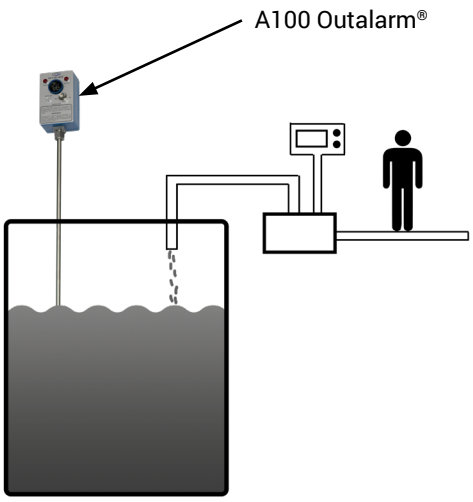

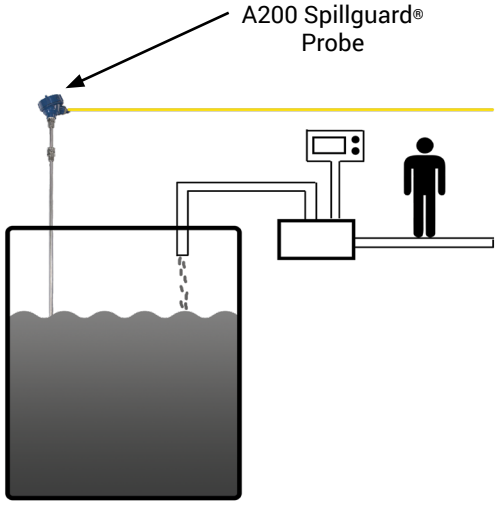

Monitor
A210

Signal Light
A210-120TC

Pezio Horn
A210PZH

Multi-point Overfill with PLC Pump Shutdown

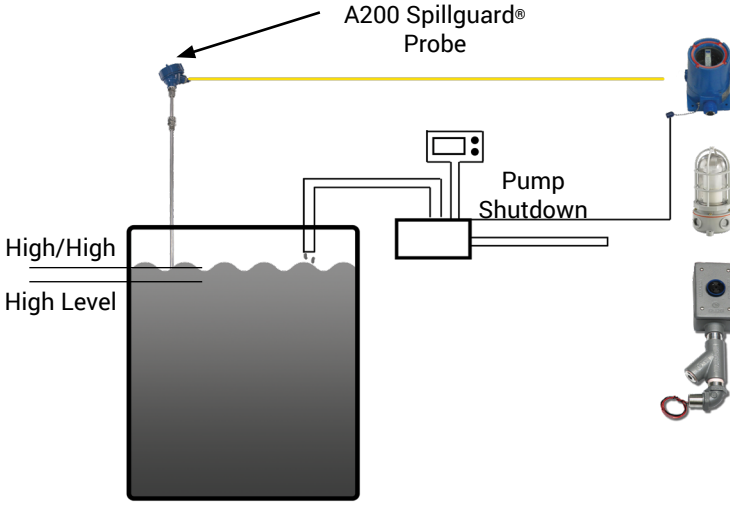

Monitor
A212

Signal Light
A210-120TC

Pezio Horn
A210PZH

A100 Monitor Repair Parts

Description	Part #	Qty
assembly, PCB, A100 monitor	30027	1
monitor housing	30028AL	1
monitor front panel	30029AL	1
foam battery retainer	30030	1
horn assembly, standard	30031	1
horn assembly repair kit	30031RK	1
horn retaining ring	30032BLA	1
lamp holder accessory, includes nut, red	30033	2
lamp holder accessory, includes nut, clear	30054	1
lamp holder O-ring	30036BN	3
lamp holder back-up washer	30037	4
standoff, hex	30038AL	4
socket set screw/ 3"-32 x 5/16"	30039	4
switch guard	30040SS	1
circuit board retaining screws 8"-32 x 5/16	30041SS	4
flanged probe connector	30052SS	1
cap screw 4"-40 x 1/2"	30043SS	4
serial number instruction label	30044AL	1
A100 enclosure gasket	30205SA	1
flanged connector O-ring	30045BN	1
molex connector, 2-position, female	30021	1
A100 top light assembly, order with 30021	30022	1

Additional Parts & Accessories

A500

Description	Part #
capacitance probe tester	A500
pressure tester	A400PSAL10012
cable to A100 adapter kit	A100CBLMTR
cable to monitor adapter kit, 3-pin mini	A100CBLMTR-002
Stahl repeater parts for A210	30092RK
Stahl repeater parts for A211	30093RK
replacement timer for A210B series	30399RK
A100 capacitance probe subassembly	30077-xxx*
A200 capacitance probe subassembly	30139-xxx*
1" cam and groove coupler and ½" NPT bushing, stainless steel	A100CA1050
1" cam and groove coupler with ½" NPT busing and 1" NPT vent tee, stainless steel	A100CA1050V
A100/200 splash guard, with 1⅛" diameter poly	A100SG-POLY
locating tab for A100/200 probes	A100LT
replacement A100 monitor only	A100MTR
cable to monitor adapter	A100CBLMTR

*xxx = Probe length in inches

5500-Series API Couplers

Application
- Combined with API adapters, these couplers are suitable for railcar and tank truck loading or unloading

Features
- Locking five-cam design provides easy alignment and tight connection
- Modular design allows various face seal combinations to be compatible with different alternative fuels, performance levels, and applications
- Shaft seals can be changed without removing coupler from the loading arm
- Fully interlocked collar cannot be opened when connected and cannot be disconnected when opened
- Replaceable seal design while coupler is on loading arm
- 4" TTMA inlet mounting flange connection
- Ball-end handle for easy and comfortable operation
- No special tools needed for maintenance
- Reference dixonvalve.com for bill of materials and a complete list of repair kits

Materials
- Body: hard coated anodized 356T6 aluminum
- Shroud: hard coated anodized 356T6 aluminum with stainless steel insert
- Link, shaft, pin, and crank: hardened 17-4PH stainless steel
- Cam: CF8M stainless steel
- Poppet and bearing: Bayloy
- Seals: Baylast, EPDM, FFKM, FKM-B, FKM-GFLT, fluorosilicone, and Hifluor

Specifications
- Seal operating temperature:
  - Baylast™: **-20°F** to **250°F (-28°C** to **121°C)**
  - EPDM: **-40°F** to **250°F (-40°C** to **120°C)**
  - FFKM: **0°F** to **400°F (-18°C** to **204°C)**
  - FKM-B: **-10°F** to **400°F (-23°C** to **204°C)**
  - FKM-GFLT: **-20°F** to **400°F** (**-28°C** to **204°C**)
  - Fluorosilicone: **-50°F** to **300°F** (**-40°C** to **149°C**)
  - Hifluor: **23°F** to **350°F** (**-5°C** to **176°C**)
- Flow rate: 600 GPM at **3 PSI** pressure drop, maximum flow rate: 1,000 GPM
- Fully compliant with API RP1004:2003 specifications
- Burst tested: **450 PSI**

Description	Seal Material	Part #	Complete Repair Kit*	Replaceable Nose Seal
4" API coupler	Baylast	5500BL	5500RK2	5500RK8
	EPDM	5500E	5500RK3	5500RK9
	FFKM	5500K	5500RK6	5500RK12
	FKM-B	5500B	5500RK1	5500RK7
	FKM-GFLT	5500G	5500RK5	5500RK11
	Fluorosilicone	5500F	5500RK4	5500RK10
	Hifluor	5500H	5500RK19	5500RK20

*Complete repair kit contains all the seals, pins, and cotter keys to replace all the seals.

5-YEAR MECHANICAL WARRANTY*

*Normal wear and tear items (including seals) not covered

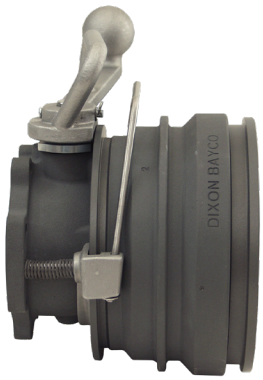

5500-Series

Replaceable nose seal: Replace without removal from the loading arm

Loading Arm Swivels

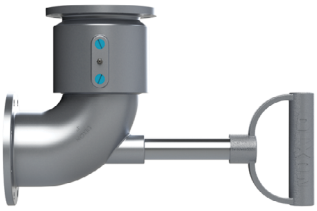

style 30, short radius

Features

- TTMA-flanged loading arm swivel with heavy-duty D-style shovel handle
- Shovel handle is used to guide the connection of the API load coupler to the adapter on the tank truck
- Long radius elbow improves the flow into the API load coupler and provides spacing between the load arm and the tank truck
- FKM-A swivel seals are compatible with ethanol blended fuel
- Can be used with flange extensions
- TTMA flanges on both ends

style 30, long radius

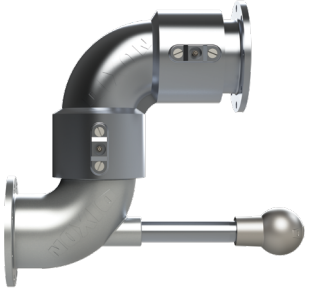

style 50

Description	Handle	Seal	3" Part #	4" Part #
style 20	no handle	Buna	320TFXTFAL00000	420TFXTFAL00000
		FKM-A	320TFXTFAL11000	420TFXTFAL11000
style 30 short radius	D-handle	Buna	33HTFXTFAL00000	43HTFXTFAL00000
		FKM-A	33HTFXTFAL11000	43HTFXTFAL11000
	ball handle	Buna	33BTFXTFAL00000	43BTFXTFAL00000
		FKM-A	33BTFXTFAL11000	43BTFXTFAL11000
	no handle	Buna	330TFXTFAL00000	430TFXTFAL00000
		FKM-A	330TFXTFAL11000	430TFXTFAL11000
style 30 long radius	D-handle	Buna	---	43HTFTFLAL00000
		FKM-A	---	43HTFTFLAL11000
	ball handle	Buna	---	43BTFTFLAL00000
		FKM-A	---	43BTFTFLAL11000
	no handle	Buna	---	430TFTFLAL00000
		FKM-A	---	430TFTFLAL11000
style 40	D-handle	Buna	34HTFXTFAL00000	44HTFXTFAL00000
		FKM-A	34HTFXTFAL11000	44HTFXTFAL11000
	ball handle	Buna	34BTFXTFAL00000	44BTFXTFAL00000
		FKM-A	34BTFXTFAL11000	44BTFXTFAL11000
	no handle	Buna	340TFXTFAL00000	440TFXTFAL00000
		FKM-A	340TFXTFAL11000	440TFXTFAL11000
style 50	D-handle	Buna	35HTFXTFAL00000	45HTFXTFAL00000
		FKM-A	35HTFXTFAL11000	45HTFXTFAL11000
	ball handle	Buna	35BTFXTFAL00000	45BTFXTFAL00000
		FKM-A	35BTFXTFAL11000	45BTFXTFAL11000
	no handle	Buna	350TFXTFAL00000	450TFXTFAL00000
		FKM-A	350TFXTFAL11000	450TFXTFAL11000

Type 35 Loading Arm Swivel Replacement Parts

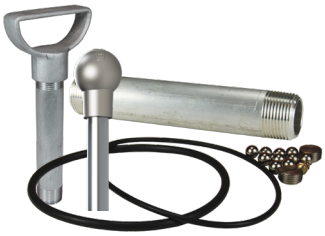

Description	Part #
4" schedule 80 aluminum nipple	ATN100X7
ball-style handle	100BHAN-AL
D-Style heavy-duty shovel handle	100DHAN-AL
Buna seal kit	4RKOBU
FKM-A seal kit	4RKOVIVI

TTMA Flange Extensions

Applications
- Used to connect an API coupler to a loading arm
- Provides a specified parting point to prevent excessive damage to the loading arm

Features
- Adds a 6" space to allow for clearance between the loading arm and the tank truck
- Color coded for product identification
- Other colors available upon request. Consult Dixon® for more details

Materials
- Aluminum, powder coated aluminum

TETF4AL

TETFG4AL

Size	Description	Part #
4"	TTMA flange extension	TETF4AL
	TTMA flange extension with groove	TETFG4AL
	TTMA flange extension with ½" female NPT port	TETF4ALFP50
	TTMA flange extension with ¾" female NPT port	TETF4ALFP75
	TTMA flange extension	TETF4AL
	TTMA flange extension; color-coded white	TETF4AL-W
	TTMA flange extension; color-coded blue	TETF4AL-B
	TTMA flange extension; color-coded green	TETF4AL-G
	TTMA flange extension; color-coded red	TETF4AL-R
	TTMA flange extension; color-coded yellow	TETF4AL-Y
	TTMA flange extension; color-coded orange	TETF4AL-O
	TTMA flange extension; color-coded black	TETF4AL-BLK
	TTMA flange extension; color-coded combination green and yellow	TETF4AL-G/Y
	TTMA flange extension; color-coded combination blue and white	TETF4AL-B/W
	TTMA flange extension; color-coded combination blue and red	TETF4AL-B/R
	TTMA flange extension; color-coded combination white and red	TETF4AL-W/R
	TTMA flange extension; color-coded combination red, white, and blue	TETF4AL-R/W/B

TETF4AL-W

TETF4AL-B

TETF4AL-G

TETF4AL-R

TETF4AL-Y

TETF4AL-G/Y

TETF4AL-R/W/B

TTMA Flange Extension Reducing Spools

Size	Description	Material	Part #
3" x 4"	TTMA flange extension reducing spool	aluminum	TETF3X4AL
	TTMA flange extension reducing spool	carbon steel	TETF3X4CS
	TTMA flange extension reducing spool	stainless steel	TETF3X4SS

TETF3x4AL

Safety Break-aways

How it Works

Safety break-away couplings have three external break bolts. In the case of axial tension, all of the bolts take up the force corresponding to the break force on the hose with a safety margin. Non-axial forces concentrate the tension force more strongly on one bolt, so that the safety break-away coupling reacts in a natural way to the reduction of the hose break forces.

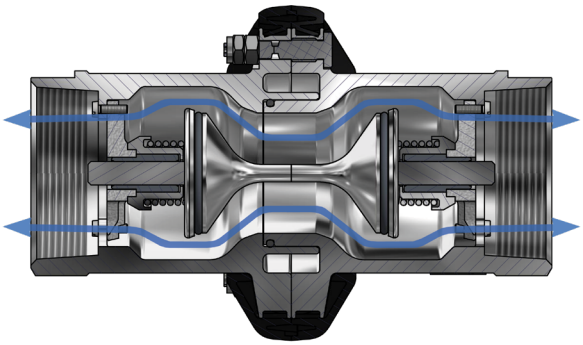

BEFORE emergency disconnect

The safety break-away valve consists of two halves, each with a valve that has a O-ring seal.

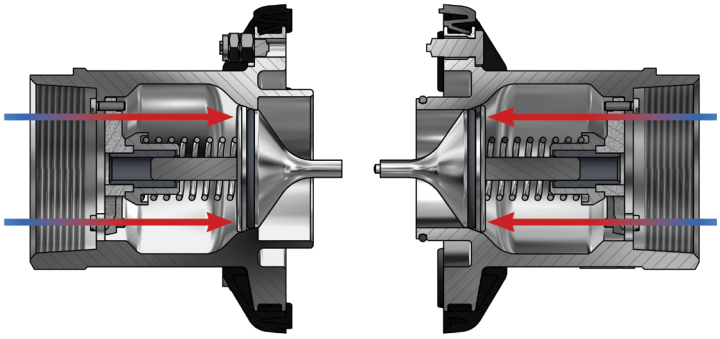

AFTER emergency disconnect

When the safety break-away couplings separate, the valves are able to close. The two valves close rapidly, minimizing exposure to personnel and the environment.

TTMA Flanged Break-Away Coupling

Application
- Installs between an API coupler and loading arm

Features
- Minimizes spillage and damage associated with drive-away and pull-away incidents
- Passive security against situations where a hose or loading arm could be subjected to inadvertent excessive loads
- Coupling automatically senses excessive load, closes the valves and disconnects
- High flow rate/low pressure drop
- FKM/FPM is standard seal

Specification
- **150 PSI** at ambient temperature **70°F (21°C)**

Size	Material	Part #
4"	Aluminum	SBC400ALTTMA

Safety Break-aways

Industrial Version

Applications
- Designed to minimize spillage and damage associated with pull-away incidents
- Typical applications: loading rack
- Designed to be installed between a fixed point (pipe, pump, or manifold) and a hose

Features
- Coupling automatically senses an excessive load, closes the valves, and disconnects
- Passive security against situations where a hose or loading arm could be subjected to inadvertent excessive loads
- High flow rate/low pressure drop
- FKM (FPM) seal standard
- Optional non-disclosure design is available; contact Dixon®

Specifications
- Working pressure: stainless steel **360 PSI** and aluminum **230 PSI** at ambient temperature **70°F (21°C)**

Size	Width	Length	Flow Rate/GPM	Material	Part #
4"	8.3"	12"	800	aluminum	SBC400AL
				316 stainless steel	SBC400SS

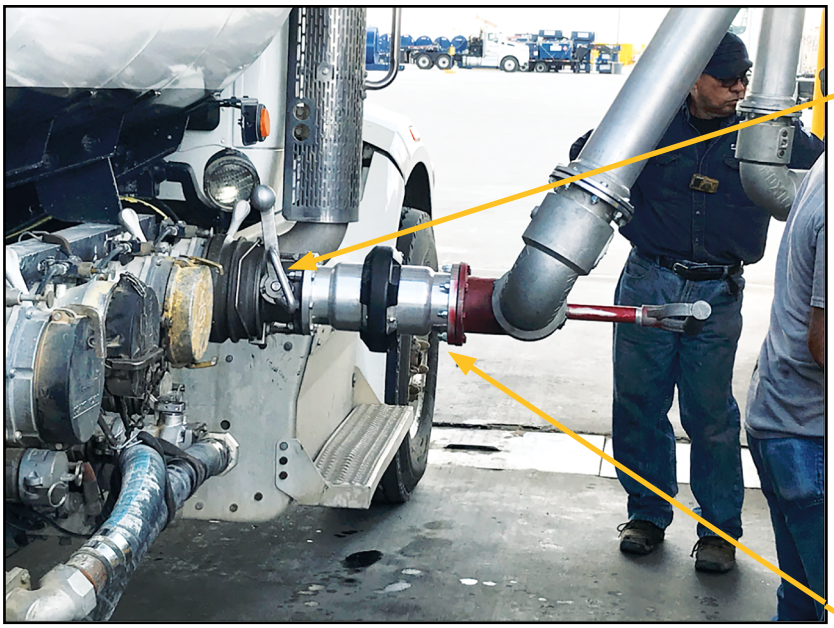

Products in use at a facility

Bayloc® Cam and Groove Style Dry Disconnects

Application
- Helps prevent spillage from normal or accidental disconnects

Sizes
- 1½", 2", and 3" female NPT adapters x 2", 2½", and 4" coupler with adapter
- 2", 2½", and 4" couplers/adapters x 2" and 3" flange

Features
- Compatible with most cam and groove style dry disconnects
- Spring-loaded sealing device "snaps" closed should the coupling become disconnected with the poppet open
- Two-piece adapter design allows easy rebuilding of adapters
- EZ Boss-Lock cam arms provide security against accidental opening
- Automatic closing poppet assembly
- Stainless steel handle allows product exposure to corrosive chemicals or washdown service
- Fully interchangeable with Kamvalok® style fitting

Materials
- Stainless steel or aluminum
- Seals: NBR - Buna/Nitrile, FKM, PTFE, and EPDM
- Contact Dixon for information on chemical compatibility, size, material selection, and special configurations

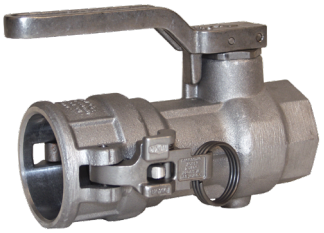

Straight configuration coupler

Coupler x Female NPT

Female NPT	Coupler Size	Seal Material	Maximum PSI at 70°F (21°C)	Aluminum Part #	Stainless Steel* Part #
1½"	2"	Buna	210	DBC61-150	DBC71-150
2"	2½"		150	DBC61-200	DBC71-200
3"	4"		120	DBC61-300	DBC71-300
1½"	2"	FKM	210	DBC62-150	DBC72-150
2"	2½"		150	DBC62-200	DBC72-200
3"	4"		120	DBC62-300	DBC72-300
1½"	2"	PTFE Encapsulated Silicone and FFPM	210	DBC63-150	DBC73-150
2"	2½"		150	DBC63-200	DBC73-200
3"	4"		120	DBC63-300	DBC73-300
1½"	2"	EPDM	210	DBC64-150	DBC74-150
2"	2½"		150	DBC64-200	DBC74-200
3"	4"		120	DBC64-300	DBC74-300
1½"	2"	FFPM and PTFE†	210	---	DBC76-150
2"	2½"		150	DBC66-200	DBC76-200
3"	4"		120	DBC66-300	DBC76-300
1½"	2"	PTFE Encapsulated FKM and FFKM	210	---	DBC77-150
2"	2½"		150	---	DBC77-200
3"	4"		120	---	DBC77-300
3"	4"	FKM-B	120	DBC69-300	DBC79-300

Greaseless Coupler x Female NPT

Female NPT	Coupler Size	Seal Material	Stainless Steel* Part #
1½"	2"	PTFE Encapsulated FKM and FFKM	DBC77-150-GL
2"	2½"		DBC77-200-GL

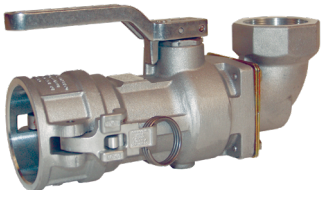

90° configuration coupler

Coupler x 90° Swivel Female NPT

Female NPT	Coupler Size	Seal Material	Aluminum Part #
2"	2½"	Buna	DBS61-200
2"	2½"	FKM	DBS62-200
2"	2½"	PTFE Encapsulated Silicone and FFPM	DBS63-200

*Stainless steel corrosion resistance is equivalent to 304 stainless steel
†FFPM gasket, main seal O-ring and handle O-ring, PTFE seals on cylinder assembly, stuffing box, and seal under poppet screw

Bayloc® Cam and Groove Style Dry Disconnects

Application
- Helps prevent spillage from normal or accidental disconnects

Sizes
- 1½", 2", and 3" female NPT adapters x 2", 2½", and 4" coupler with adapter
- 2", 2½", and 4" couplers/adapters x 2" and 3" flange

Features
- Compatible with most cam and groove style dry disconnects
- Spring-loaded sealing device "snaps" closed should the coupling become disconnected with the poppet open
- Two-piece adapter design allows easy rebuilding of adapters
- Automatic closing poppet assembly
- Fully interchangeable with Kamvalok® style fitting

Materials
- Stainless steel or aluminum
- Seals: NBR - Buna/Nitrile, FKM, PTFE, and EPDM
- Contact Dixon® for information on chemical compatibility, size, material selection, and special configurations

Adapter x Female NPT

Female NPT	Adapter Size	Seal Material	Maximum PSI at 70°F (21°C)	Aluminum Part #	Stainless Steel Part #
1½"	2"	Buna	210	DBA11-150	DBA71-150
2"	2½"		150	DBA11-200	DBA71-200
3"	4"		120	DBA11-300	DBA71-300
1½"	2"	FKM	210	DBA12-150	DBA72-150
2"	2½"		150	DBA12-200	DBA72-200
3"	4"		120	DBA12-300	DBA72-300
1½"	2"	PTFE Encapsulated Silicone	210	DBA63-150	DBA73-150
2"	2½"		150	DBA63-200	DBA73-200
3"	4"		120	DBA63-300	DBA73-300
1½"	2"	EPDM	210	DBA64-150	DBA74-150
2"	2½"		150	DBA64-200	DBA74-200
3"	4"		120	DBA64-300	DBA74-300
1½"	2"	FFPM	210	DBA66-150	DBA76-150
2"	2½"		150	DBA66-200	DBA76-200
3"	4"		120	DBA66-300	DBA76-300
1½"	2"	PTFE Encapsulated FKM	210	---	DBA77-150
2"	2½"		150	---	DBA77-200
3"	4"		120	---	DBA77-300
3"	4"	FKM-B	120	DBA69-300	---

DBA adapter

Jump Size Adapter x Female NPT

Female NPT	Adapter Size	Seal Material	Maximum PSI at 70°F (21°C)	Aluminum Part #
2"	2"	Buna	150	DBA11-1520
2"	2"	FKM	150	DBA12-1520

DBA jump size adapter

Adapter x 150# ASA Flange

Flange Size	Adapter Size	Seal Material	Maximum PSI at 70°F (21°C)	Stainless Steel Part #
2"	2"	FKM	150	DBAF72-1520
		PTFE Encapsulated Silicone		DBAF73-1520
		EPDM		DBAF74-1520
		FFPM		DBAF76-1520
2"	2½"	FKM	150	DBAF72-200
		PTFE Encapsulated Silicone		DBAF73-200
		EPDM		DBAF74-200
		FFPM		DBAF76-200
3"	4"	FKM	150	DBAF72-300
		PTFE Encapsulated Silicone		DBAF73-300
		EPDM		DBAF74-300
		FFPM		DBAF76-300

DBA flange adapter

Vapor Recovery Couplers

VR4040CS-AL

Features

- "Floating bridge" poppet design allows optimal flow
- Machined hose shank ensures easier insertion into hose and better sealing
- Durable and easy-to-couple
- Big wings ensure contact with air interlock button on tanker, helping prevent drive-offs
- Change poppet seal without removing the coupler from the hose
- Secure to hose with traditional band clamps or built-in crimp collar
- 4" MNPT version allows for either cam and groove or threaded flange option
- 45° angle version relieves stress common to vapor hoses, swivel version also available

Materials

- Coupler: aluminum
- Seal: Buna-N
- Cam arms: stainless steel

VR4030CS-AL45 &
VR4040CS-AL45

VR4040CS-ALS45

VR4040CS-4MNPT
(TTF4AL-4FT sold separately)

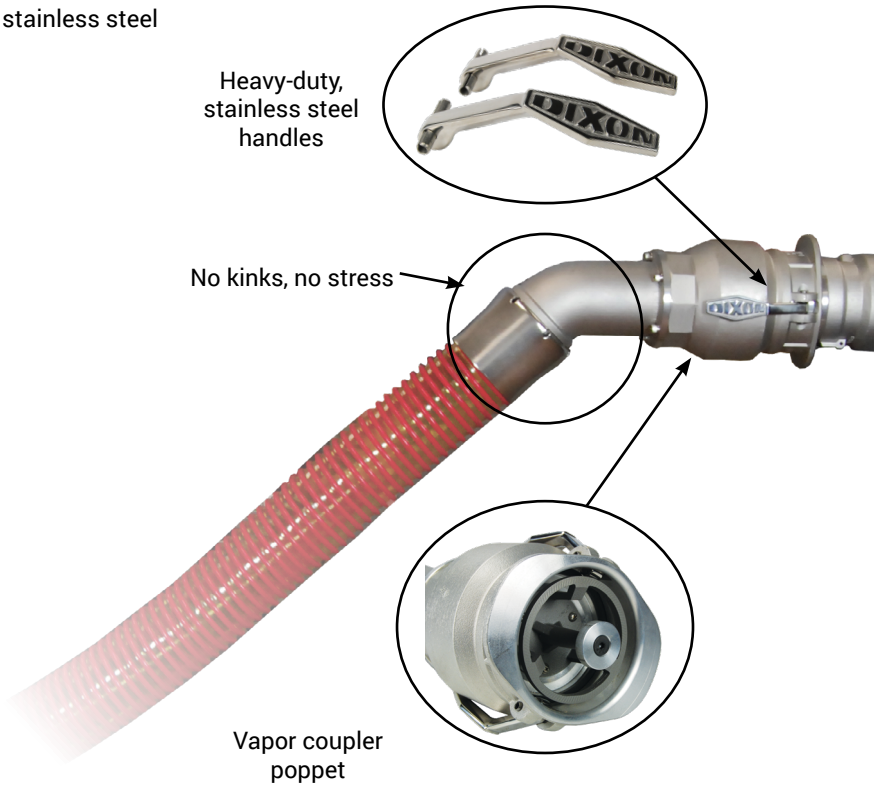

Description	Part #
4" coupler x 4" hose shank	VR4040CS-AL
4" coupler x 3" 45° hose shank	VR4030CS-AL45
4" coupler x 4" 45° hose shank	VR4040CS-AL45
4" coupler x 4" 45° hose shank swivel	VR4040CS-ALS45
4" coupler x 4" MNPT connection	VR4040CS-4MNPT
4" coupler x 4" female NPT	VR4040CS-4FNPT
4" coupler x 3" hose shank	VR4030CS-SH
seal repair kit	VR4040CSRK1
cam arm repair kit	VR4040CSRK2

Handle kit sold separately on page 33.

Vapor Recovery Coupler Handle Kits

Description	Part #
handle kit	VRHK
compact handle kit	VRHK-C

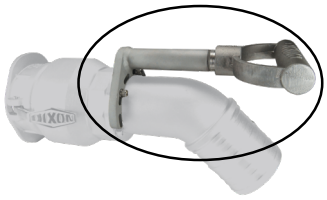

VRHK
(vapor recovery coupler handle kit sold separately)

VRHK-C

Bayloc® Dry Disconnect Vapor Recovery Couplers

Application
- Bayloc dry disconnect, modified with a seal cylinder device, forms a secondary seal against truck adapter and maintains pressure on seals despite wear resulting from normal use

Features
- Locking handle
- Designed to meet California Air Resources Board (CARB) vapor emission requirements
- Dual seal against truck adapter provides vapor tight operation

Materials
- Aluminum
- FKM seals

Description	Part #
3" coupler x 4" FNPT	DBC62LVPR-300

Vapor Recovery Couplers

Features
- Not intended for liquid service; for vapor recovery only
- For use with vapor recovery hose
- VR4030CS-AL has an FKM O-ring poppet seal

Materials
- Coupler: aluminum
- Arms: bronze with stainless steel pins
- Finger rings: plated carbon steel
- Gasket: Buna-N

Coupler With Probe x Hose Shank

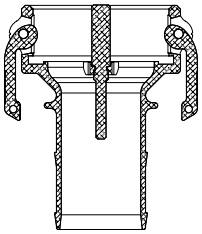

Coupler Size	Hose Shank Size	Part #
4"	3"	4030-CVR-AL
	4"	400-CVR-AL

Coupler With Probe x Adapter

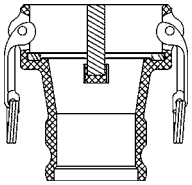

Coupler Size	Adapter Size	Part #
4"	3"	4030-DAVR-AL

Coupler With Probe x Female NPT

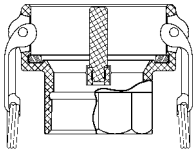

Coupler Size	Female NPT Size	Part #
4"	3"	4030-DVR-AL
	4"	400-DVR-AL

Coupler With Probe x Coupler With Probe

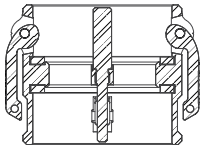

Coupler Size	Coupler Size	Part #
4"	4"	400-DDVR-AL

Coupler With Probe x Hose Shank

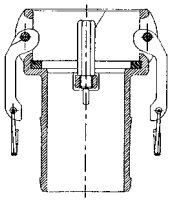

Coupler Size	Hose Shank Size	Part #
3"	3"	VRC3000AL

Coupler With Poppet* And Probe x Hose Shank

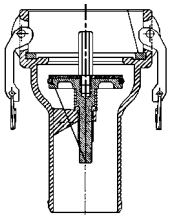

Coupler Size	Hose Shank Size	Part #
4"	3"	VR4030CS-AL*

*Only works with tank trucks that have poppet adapters.

TTMA Series Flange Adapters

Features
- Simply and easily converts threaded components to a standard TTMA flange configuration
- Solid cast lightweight aluminum design is more durable than welded fabrications
- Design improves flow through adapter
- Compact size reduces the overall space needed to install

Material
- Aluminum

TTF4AL-4MT

Male Threaded

TTMA Flange	Male NPT	Overall Length	Part #
3"	3"	2½"	TTF3AL-3MT
4"	3"	2½"	TTF4AL-3MT
	4"	2½"	TTF4AL-4MT

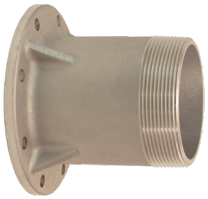

TTF4AL-4EMT

Extended Length Male Threaded

TTMA Flange	Male NPT	Overall Length	Part #
4"	3"	5½"	TTF4AL-3EMT
	4"	5½"	TTF4AL-4EMT

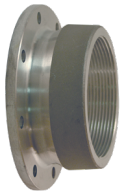

TTF4AL-4FT

Female Threaded

TTMA Flange	Female NPT	Overall Length	Part #
4"	3"	2½"	TTF4AL-3FT
	4"	2½"	TTF4AL-4FT

TTF400SP

Slip-On

TTMA Flange	Pipe Size	Part #
4"	4"	TTF400SP

Universal Flange Gaskets

Features
- Standard drop-ring type, all 1/16" thick
- For flange dimensional information and diagrams, please reference dixonvalve.com

Neoprene

Size	Neoprene Part #	Klingersil® C-4401 Part #
1"	NG10	AG10
1¼"	NG15	AG15
1½"	NG20	AG20
2"	NG25	AG25
2½"	NG30	AG30
3"	NG35	AG35
4"	NG40	AG40
5"	NG50	---
6"	NG60	AG60
8"	NG80	AG80

Klingersil® C-4401

Round TTMA Flange Gaskets

Cork and PTFE envelope

Size	OD	ID	THK	Material	Part #
3"	5⅝"	3½"	⅛"	cork/buna	300GTTFCB
3"	5⅝"	3½"	1/16"	PTFE envelope with Klinger filler	300GTTFTK
3"	5⅝"	3½"	⅛"	Klingersil® C-4401	300GTTFK
3"	5⅝"	3⅝"	⅛"	Baylast	300GTTFBL
3"	5⅞"	3½"	¼"	PTFE with fiber core	40321TF
4"	6⅝"	4 9/16"	⅛"	cork/buna	400GTTFCB
4"	6⅝"	4 9/16"	1/16"	PTFE envelope with Klinger filler	400GTTFTK
4"	6⅝"	4 9/16"	⅛"	Klingersil® C-4401	400GTTFK
4"	6⅝"	4⅝"	⅛"	Baylast	400GTTFBL
4"	6⅞"	4 9/16"	¼"	PTFE with fiber core	40322TF

Betts Wet-R-Dri Valves

WD401ALVB

Application
- Designed for handling liquid, gaseous, or dry products

Features
- Positive stop in the open and closed position
- Detent spring and ball assist in holding the disc in the open and closed position

Size	Description	Part #
3"	TTMA Wet-R-Dri valve with manually-operated detent handle	WD301ALVB
3"	TTMA Wet-R-Dri valve with manually-operated metering handle	WD304ALVB
4"	TTMA Wet-R-Dri valve with manually -operated detent handle	WD401ALVB
4"	TTMA Wet-R-Dri valve with manually-operated metering handle	WD404ALVB

TTMA Flanged Sight Flow Indicators

TT4ASG-ETH

Features
- For use with ethanol
- Tank truck flange gaskets and dimensional information at dixonvalve.com

Material
- Acrylic

Specifications
- Maximum flange bolt torque is 200 in-lb
- Due to the proprietary blending of petroleum products, Dixon recommends that the thermoplastic tubing and the gaskets be immersion tested in the product to be handled to ensure compatibility
- Not compatible with crude oil

Size	Nominal Width	Part #
3"	1¾"	TT3ASG-ETH
4"	1¾"	TT4ASG-ETH

Loading Arms

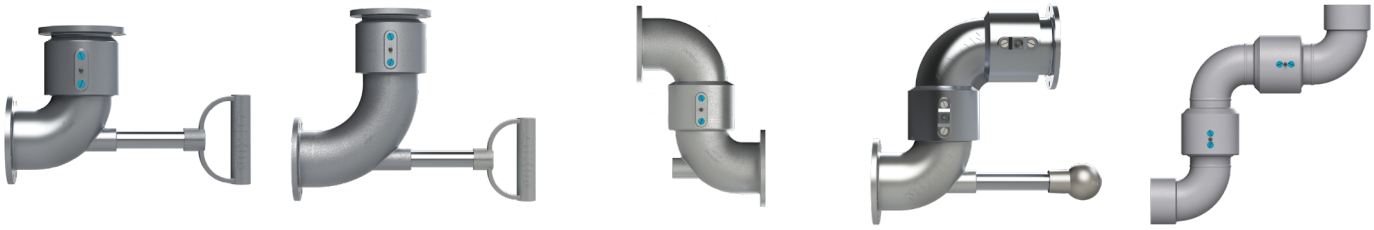

Style 30, short radius | Style 30, long radius | Style 40 | Style 50 | Style 70

Applications
- Used in the transfer of liquids and dry bulk in refineries, chemical plants, rail terminals, truck terminals, tote/drum filling, and the food industry

Sizes
- 2", 3", and 4"

Features
- Three arm swivel options: O-ring, V-ring, or split flange
- Two base swivel options: V-ring or split flange
- Fast delivery for many sizes and styles
- Engineered with easy service in mind
- D-handle/ball handle is used to guide the API load coupler onto the adapter on the tank truck
- Long radius elbow improves the flow into the API load coupler and provides space between the load arm and the tank truck, allowing for clearance
- Torsion spring counterbalance:
  - Ball screw adjustment mechanism for easy and safe adjustment
  - Multiple spring rates available for different load requirements
  - Multiple grease ports for ease of service
- Many different end connections offered as well as accessories; contact Dixon for more information

Materials
- Arm: carbon steel, aluminum, and 316 stainless steel
- Counterbalance/base swivel: 316 stainless steel and carbon steel
- Seals: Buna-N, FKM-A, NPRN, PTFE, and more upon request
- Hose: 321/316/304 stainless steel or composite

Available options
- All styles: a-frame, scissor, horizontal, pantograph, supported/unsupported boom, and others.

Top Loading Arms

Sizes
- 2", 3", and 4"

Features
- Three arm swivel options: O-ring, V-ring, or split flange
- Two base swivel options: V-ring or split flange
- Left- or right-handed
- Torsion spring counterbalance:
  - Ball screw adjustment mechanism for easy and safe adjustment
  - Multiple spring rates available for different load requirements
  - Multiple grease ports for ease of service
- Fast delivery for many sizes and styles
- Engineered with easy service in mind
- Many different end connections and accessories; contact Dixon® for more information

Materials
- Arm: carbon steel, aluminum, or 316 stainless steel
- Counterbalance/base swivel: 316 stainless steel, or carbon steel
- Seals: Buna-N, FKM-A, NPRN, PTFE, and more upon request

Locking Mechanism

LA-LOCKINGASSEM
Locking mechanism

Application
- Used in asphalt applications to help reduce sudden arm movement caused by clogged pipes or pressure changes

Material
- Carbon steel

Scissor Style Arms

Application
- Extended reach for horizontal loading

Sizes
- 2", 3", and 4"

Features
- Three arm swivel options: O-ring, V-ring, or split flange
- Two base swivel options: V-ring or split flange
- Left- or right-handed
- Fast delivery for many sizes and styles
- Engineered with easy service in mind
- Torsion spring counterbalance:
  - Ball screw adjustment mechanism for easy and safe adjustment
  - Multiple spring rates available for different load requirements
  - Multiple grease ports for ease of service
- Larger range of motion able to hit multiple fill points
- Many different end connections and accessories; contact Dixon for more information

Materials
- Arm: carbon steel, aluminum, or 316 stainless steel
- Counterbalance/base swivel: 316 stainless steel, or carbon steel
- Seals: Buna-N, FKM-A, NPRN, PTFE, and more upon request

Bottom Loading Arms

Sizes
- 2", 3", and 4"

Features
- Three arm swivel options: O-ring, V-ring, or split flange
- Two base swivel options: V-ring or split flange
- Left- or right-handed
- Torsion spring counterbalance:
  - Ball screw adjustment mechanism for easy and safe adjustment
  - Multiple spring rates available for different load requirements
  - Multiple grease ports for ease of service
- Fast delivery for many sizes and styles
- Engineered with easy service in mind
- Many different end connections and accessories; contact Dixon® for more information

Materials
- Arm: carbon steel, aluminum, or 316 stainless steel; optional drop leg with metal or composite hose
- Counterbalance/base swivel: 316 stainless steel, or carbon steel
- Seals: Buna-N, FKM-A, NPRN, PTFE, and more upon request

Loading Arm Base Swivels

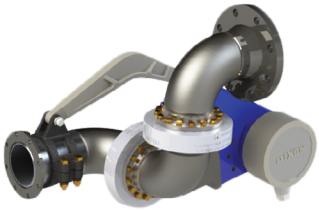

Sizes
- 2", 3", and 4"

Features
- Three arm swivel options: O-ring, V-ring, or split flange
- Two base swivel options: V-ring or split flange
- Left- or right-handed
- Torsion spring counterbalance:
  - Ball screw adjustment mechanism for easy and safe adjustment
  - Multiple spring rates available for different load requirements
  - Multiple grease ports for ease of service
- Fast delivery for many sizes and styles
- Engineered with easy service in mind
- Many different end connections and accessories; contact Dixon for more information

Materials
- Counterbalance/base swivel: 316 stainless steel, or carbon steel
- Seals: Buna-N, FKM-A, NPRN, PTFE, and more upon request

Loading Arm Legs/Spools

Sizes
- 2", 3", and 4"

Features
- Inlet and outlet: TTMA flanged
- Connections: TTMA flanged, 150# flanged, MNPT, FNPT, weld connection, and 300 lb. flange

Materials
- Arm: carbon steel, aluminum, and 316 stainless steel; optional drop leg with metal or composite hose
- Special piping upon request

Counterbalances

ESB1/A

Features
- Includes pivot arm (shown) and spring to help prevent possible pinch point
- Easy-adjust tension bolt, carbon steel housing
- Carbon steel

Description	Part Number
light-duty white torsion spring, right hand	ESB1/A
medium-duty yellow torsion spring, right hand	ESB1/B
heavy-duty red torsion spring, right hand	ESB1/C
light-duty black torsion spring, left hand	ESB1/E
medium-duty grey torsion spring, left hand	ESB1/F
heavy-duty orange torsion spring, left hand	ESB1/G

Counterbalance Arm Accessories

ESB-CLAMP-3

ESB1-PGUARD

Features
- Clamps connect pivot arm bar to the counterbalance
- Pivot arm guard helps eliminate possible pinch point

Materials
- Clamp: iron
- Pivot arm guard: nylon-based and fiber-reinforced plastic

Size	Description	Part Number
2"	clamp	ESB-CLAMP-2
3"	clamp	ESB-CLAMP-3
4"	clamp	ESB-CLAMP-4
---	pivot arm guard	ESB1-PGUARD

Top Loading Valves and Accessories

Applications
- Manual or remote controlled valve mounts before the loading arm horizontal leg to control flow
- Use in top loading fuels and other low viscosity media

TLV-400TFVBVIAL

Features
- BSP threaded vacuum breaker standard
- Manually operated "deadman" style with spring-loaded handle
- Optional remote-handle available

Materials
- Valve: aluminum
- Vacuum breaker body: brass
- Vacuum breaker housing: aluminum
- Seals: FKM

TLRVK-300ALX58

VB-050-BSP

Size	Description	Part Number
2"	top loading valve with FNPT and vacuum breaker	TLV-200FTVBVIAL
2"	top loading valve with TTMA flanges and vacuum breaker	TLV-200TFVBVIAL
3"	top loading valve with TTMA flanges and vacuum breaker	TLV-300TFVBVIAL
4"	top loading valve with TTMA flanges and vacuum breaker	TLV-400TFVBVIAL
2"	valve remote, handle, and bracket kit with bar	TLRVK-200ALX58
3"	valve remote, handle, and bracket kit with bar	TLRVK-300ALX58
4"	valve remote, handle, and bracket kit with bar	TLRVK-400ALX58
2"	valve remote, handle, and bracket kit	AT1350-2
3"	valve remote, handle, and bracket kit	AT1350-3
4"	valve remote, handle, and bracket kit	AT1350-4
½"	vacuum breaker, BSP threads	VB-050-BSP[1]
½"	vacuum breaker, NPT threads	VB-050-NPT

[1]Replacement vacuum breaker for the loading valves

Top Loading Diffusers/T-Deflectors

TLD-300S

Application
- Installed on drop leg of a top load loading arm to distribute media evenly to help reduce splash

Features
- Diffusers distribute media evenly 360°
- T-deflectors distribute media to the sides of the tank, railcar, or tote

Material
- Aluminum

TLTD-400S

Size	Description	Part #
3"	360° diffuser	TLD-300S
	T-deflector	TLTD-300S
4"	360° diffuser	TLD-400S
	T-deflector	TLTD-400S

Loading Arm Support Braces

LA-BRACE3

Application
- Support the load on the arm for applications with a long reach or high moment load

Features
- Pillow-bearing support with turnbuckle for easy adjusting
- Clamp included for easy loading arm attachment

Material
- Carbon steel

Size	Description	Part #
3"	loading arm support brace	LA-BRACE3
4"	loading arm support brace	LA-BRACE4

Split Flange Swivel Handles and Locks

LA-SFLOCKTHK-S

Applications
- Locks the loading arm into a horizontal position
- Not to be used vertically

Feature
- Single or multiple hole design

Material
- Carbon steel

100*HAN-AL

Description	Part Number
locking single hole T-handle kit for split flange swivel joints	LA-SFLOCKTHK-S
locking multiple hole T-handle kit for split flange swivel joints	LA-SFLOCKTHK-M
ball handle for loading arm swivels	100BHAN-AL
D-handle for loading arm swivels	100DHAN-AL
1" Schedule 80 nipple 7" OAL	ATN100X7

ATN100X7

Swivels

Typical Applications

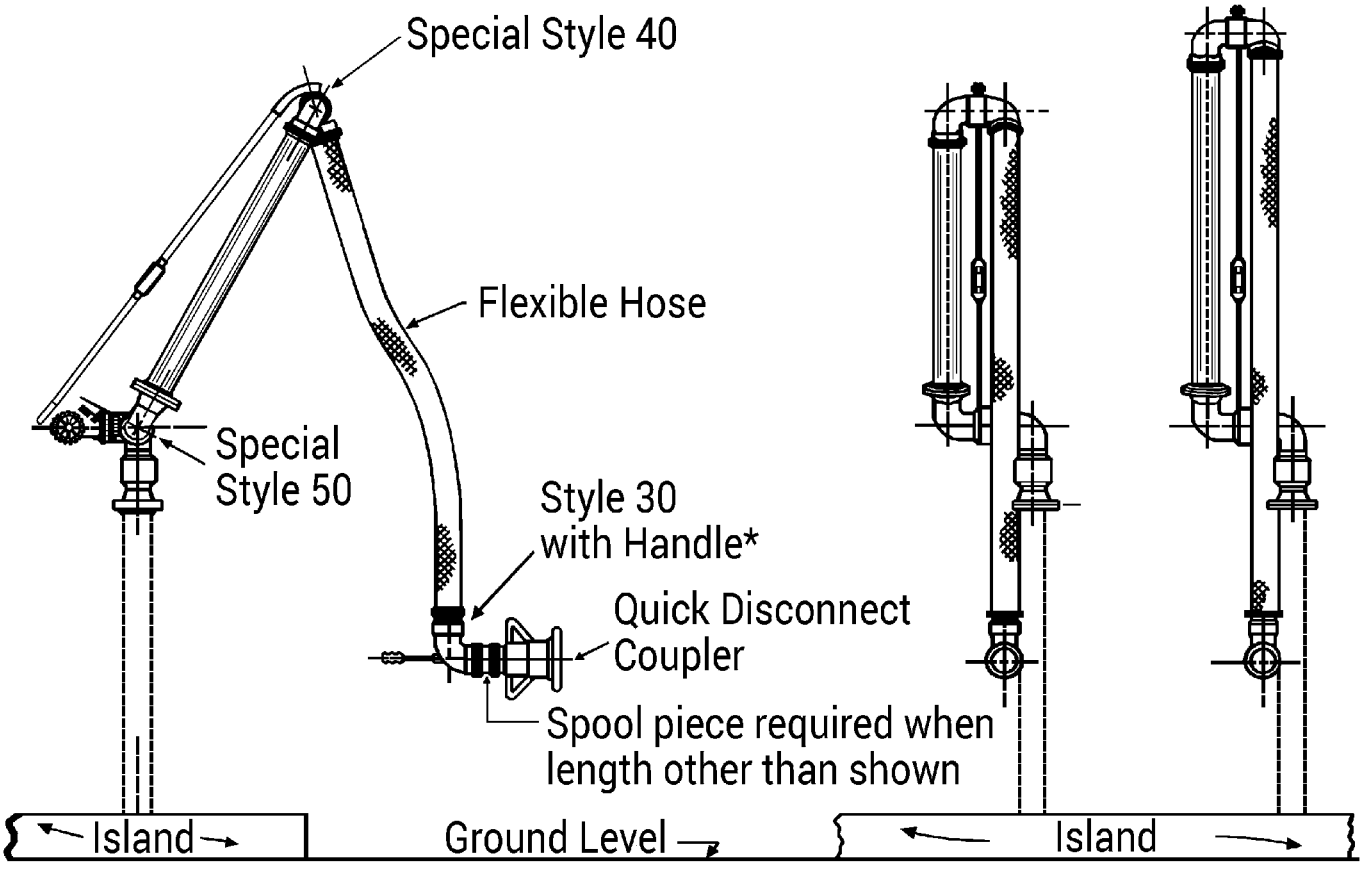

O-Ring Swivel Joints

Applications
- Commonly used in aluminum loading/unloading arm applications

Sizes
- 1" - 4"

Features
- O-ring pressure seal ensures a leak-proof seal and smooth rotation with lower torque
- Smooth moving seal for high-volume drum and tote loading
- Available working pressure ratings up to 1,000 PSI
- Swivel end configurations: 150 lb. and 300 lb. flanges, FNPT, MNPT, butt weld, TTMA, and others upon request

Materials
- Available in carbon steel, 316L stainless steel, aluminum, brass, and malleable iron

Bill of Materials
1. O-ring (dust) seal
2. Ball retainer screw
3. Grease fitting
4. O-ring (pressure) seal
5. Ball bearings
6. Sleeve
7. Body

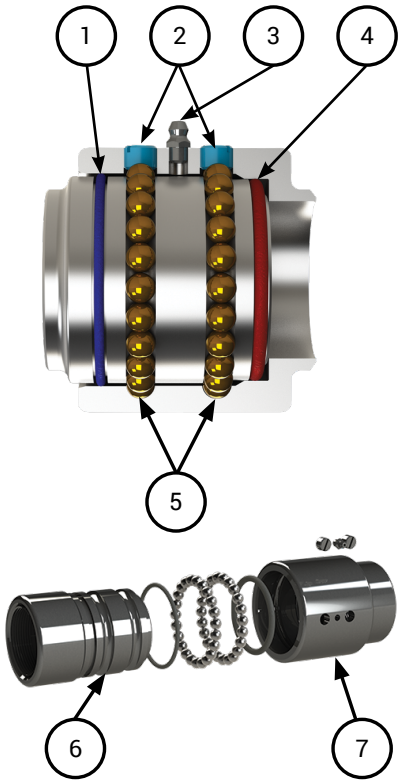

V-Ring Swivel Joints

Applications
- V-ring, also known as chevron packing, is a multiple lip seal known for its reliability and long life
- Designed to seal even under misalignment caused by race wear from years of service

Sizes
- 2" - 12"

Features
- Three lip seals and the ability to seal even if the unit is in misalignment result in longer time between service periods, increasing up-time efficiencies, and lowering maintenance costs
- Spring-loaded triple v-ring sealing system ensures a leak-proof seal at high or low pressure and extends seal life
- Swivels are shipped standard with the following:
  - Buna-N pressure seals and dust seals
  - Carbon steel ball bearings
  - PTFE retainers in V-ring swivels
- Available working pressure ratings up to **1,000 PSI**

Materials
- Carbon steel, 316L stainless steel, and aluminum

Bill of Materials
1. Body
2. Sleeve
3. Ball bearings
4. Seal retainer
5. V-ring (pressure) seal
6. Spring retainer
7. Spring
8. Ball retainer screw
9. Grease fitting
10. O-ring (dust seal)

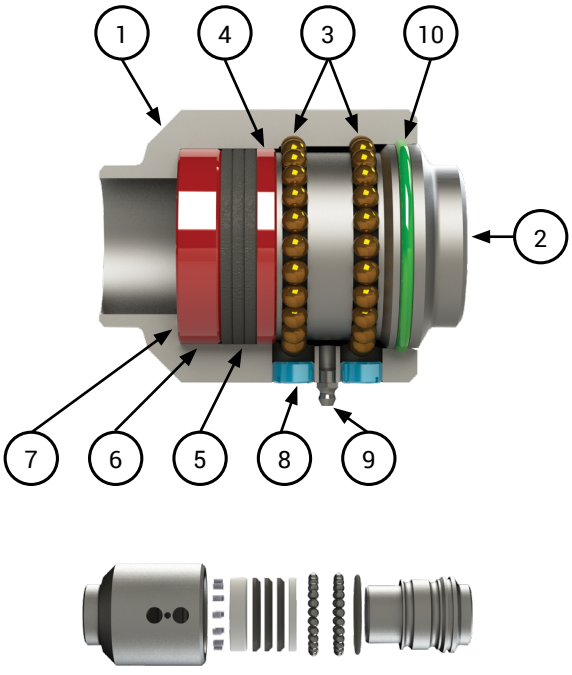

Split Flange Swivels

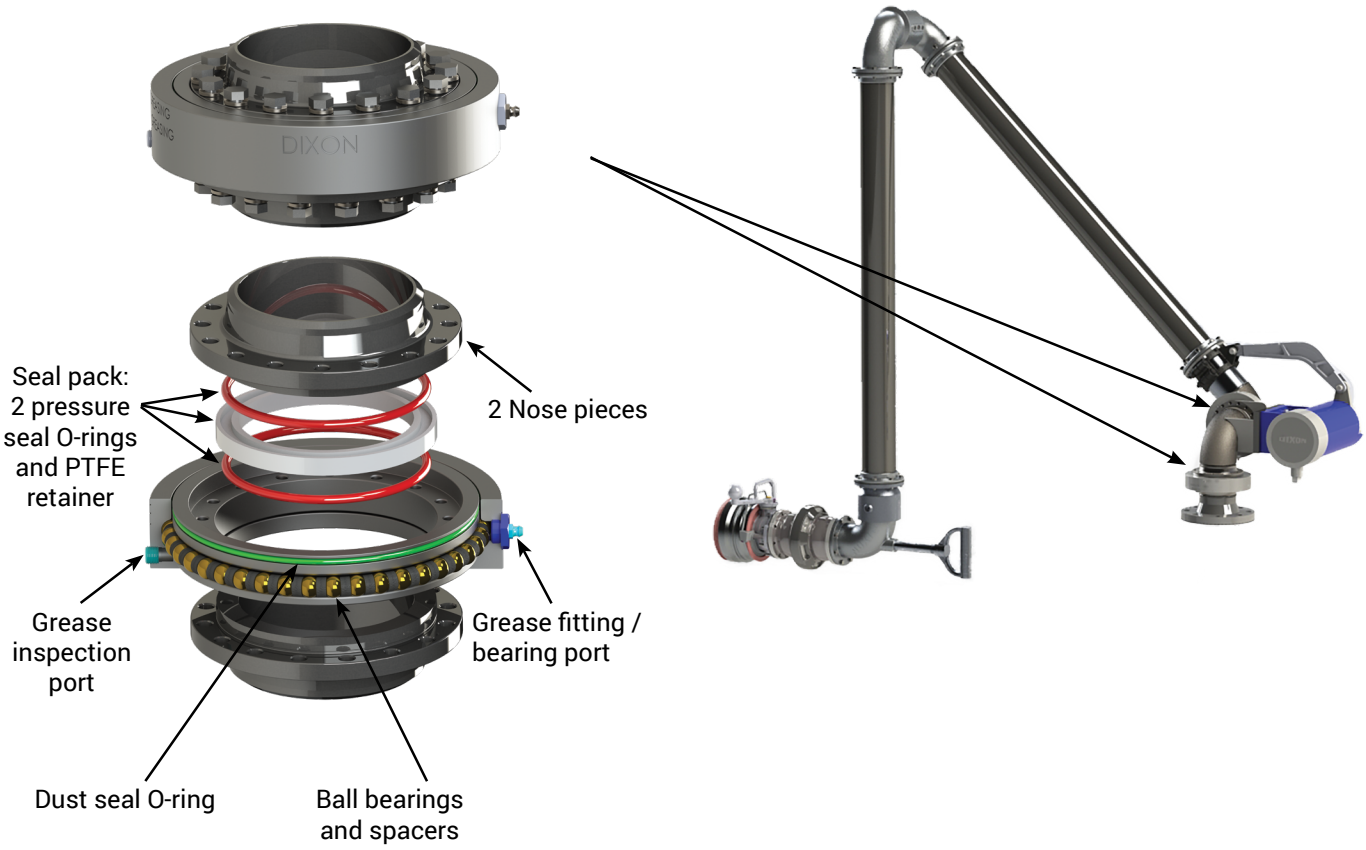

Applications
- For use in industries including petroleum, blending plants, petrochemical, refining, mining, distilling, paint plants, farm irrigation and fertilizing, wastewater treatment, food and beverage process equipment, marine, and many more

Sizes
- 2", 3", and 4"

Features
- Bearing pack design allows easy seal change without removing the ball bearings
- Simple maintenance: remove one nose piece, replace seal pack, and reinstall with little downtime
- In-stream seal separates the wetted area from the ball bearings, allowing for longer bearing pack life compared to conventional swivels
- Wide-set bearing race for higher moment loads
- Compact design for low-profile applications
- Full penetration weld

Materials
- Bearing pack: through-hardened forged high-carbon alloy
- Material contact surfaces: stainless steel or carbon steel nose pieces
- Seals: FKM-A, PTFE, and more upon request

Specifications
- Pressure rating: up to **600 PSI**
- Standard temperature range is **-40°F** to **250°F (-40°** to **121°C)**; other temperature ranges can be met upon request, depending on seal material (with standard Buna-N seals: **250°F [121°C]**)

Available options
- Swivel end configurations: 150 lb. and 300 lb. flanges, FNPT, MNPT, butt weld, TTMA, and others upon request

Notes

Notes

Limited Warranty

DIXON VALVE AND COUPLING COMPANY, LLC (herein called "Dixon") warrants the products described herein and manufactured by Dixon to be free from defects in material and workmanship for a period of one (1) year from date of shipment by Dixon under normal use and service. Its sole obligation under this warranty being limited to repairing or replacing, as hereinafter provided, at its option any product found to Dixon's satisfaction to be defective upon examination by it, provided that such product shall be returned for inspection to Dixon's factory within three (3) months after discovery of the defect. The repair or replacement of defective products will be made without charge for parts or labor. This warranty shall not apply to: (a) parts or products not manufactured by Dixon, the warranty of such items being limited to the actual warranty extended to Dixon by its supplier; (b) any product that has been subject to abuse, negligence, accident, or misapplication; (c) any product altered or repaired by others than Dixon; and (d) to normal maintenance services and the replacement of service items (such as washers, gaskets, and lubricants) made in connection with such services. To the extent permitted by law, this limited warranty shall extend only to the buyer and any other person reasonably expected to use or consume the goods who is injured in person by any breach of the warranty. No action may be brought against Dixon for an alleged breach of warranty unless such action is instituted within one (1) year from the date the cause of action accrues. This limited warranty shall be construed and enforced to the fullest extent allowable by applicable law.

Other than the obligation of Dixon set forth herein, Dixon disclaims all warranties, express or implied, including but not limited to any implied warranties of merchantability or fitness for a particular purpose, and any other obligation or liability. The foregoing constitutes Dixon's sole obligation with respect to damages, whether direct, incidental, or consequential, resulting from the use or performance of the product.

Some products and sizes may be discontinued when stock is depleted or may require a minimum quantity for ordering.

Limits of Liability

This catalog is intended as a product offering. It is not intended to be a user or technical manual. Information in this catalog is subject to change without notice. All users and distributors of products sold through this catalog should contact Dixon with questions of use, compatibilities, coupling procedures, and life of product. Our full-time engineering and test staff are always available to recommend uses and to assist distributors and users with any questions.

Safety

Safety logos, which appear throughout our catalog, are used as a reminder that the user should carefully review for the appropriateness of the product for the media, application, and environment in which it will be used.

NOTE: Because of the health hazards associated with contamination and lead content in drinking water systems, Dixon couplings, unless otherwise specifically approved, are not recommended for potable water service and should not be used in applications where drinking water will contact the wetted surfaces of the coupling.

WARNING: Dixon products may contain chemicals known to the State of California to cause cancer, birth defects, or other reproductive harm.

Trademark

Kamvalok® is a registered trademark of OPW Engineered Systems.

Copyright

Copyright © 2021 by Dixon Valve and Coupling Company, LLC

All rights reserved. This book is copyrighted material. Use, reproduction or copying of it by anyone other than Dixon® is strictly forbidden without its express written consent.

NOTE: Reasonable care has been taken in preparing this catalog. Dixon Valve & Coupling Company, LLC reserves the right to make corrections.

The Right Connection®

Dixon

1 Dixon Square
Chestertown, MD 21620
Phone: 877.963.4966
Email: sales@dixonvalve.com

connect with us on

© 2021 DVCC

Printed in the USA

TERMINALBRO_0521_1P15C