SANITARY SOLUTIONS INC.

Bulldog Fittings/Valves...Bulldog Tough.

Customer Service Toll Free:
1-888-909-3569 or 1-855-640-7871
Nine Warehouses located in West Columbia, SC 29169
Website Address: www.sanitarysolutionsinc.com

Distributed By:

2019 Catalog

What is the 3-A® symbol?

It's the symbol which manufacturers of dairy equipment may place on their equipment when it meets the 3-A Sanitary Standards.

The 3-A sanitary standards are made up of groups representing processors, suppliers and regulatory officials, with advice from federal government sanitation specialists. These standards are voluntarily met by manufacturers and fabricators. Local, State, and Federal regulatory authorities generally accept equipment which conforms to the 3-A Sanitary Standards.

Who may use the 3-A® symbol?

Only those manufacturers whose equipment meets the existing 3-A Sanitary Standards and who are authorized to do so by the 3-A Sanitary Standards Symbol Administrative Council. Since these standards may be amended, manufacturers must apply annually for the privilege of using the 3-A symbol, and annually indicate that their products conform in all respects to the published 3-A Sanitary Standards.

Sanitary Solutions holds the following 3-A® certificates:

3-A Certificate Number 3551 for 33-03 (Metal Tubing)
3-A Certificate Number 3552 for 63-03 (Sanitary Fittings)
3-A Certificate Number 3641 for 42-02 (In-Line Strainers)
3-A Certificate Number 3642 for 65-01 (Sight Indicators in Contact with Product)
3-A Certificate Number 3644 for 51-01 (Plug-Type Valves)
3-A Certificate Number 3676 for 78-02 (Spray Cleaning Devices Intended to Remain in Place)

www.sanitarysolutions.com

Sanitary Solutions Inc. 1-888-909-3569

SANITARY SOLUTIONS INC.

Bulldog Fittings/Valves...Bulldog Tough.

Sanitary Solutions takes great pride in supplying the 2019 expanded catalog filled with new products and more information. Our intention is to assist both the distributor and their customer base. Please take a few moments to review the part number breakdown:

2	Elbow (45°,90°,180°, Sweep)
7	Tee
9	Cross
11	Plug Valve
13	Clamp or Hex Nut
14	Ferrule or Hose Adapter
15	Ferrule Threaded or Female
16	End Cap
17	Transition Piece
19	Weld x MNPT
21	Clamp x Male Adapter
22	Clamp x Female Adapter
23	Thermometer Cap
28L	Lateral
28Y	True Y
31	Concentric Reducer
32	Eccentric Reducer
38	Flange
40	Gasket (1" and above)
42	Gasket (1/2" and ¾")
45	Check Valve
54	Sight Glass
60	"L" Body Relief Valve

ABCV = Air Blow Check Valve
ABFV = Actuated Butterfly Valve
ARV = Air Relief Valve
BFV = Multi-Position Butterfly Valve
BFVF = (4) Four Position Butterfly Valve
BFVPE = Plastic Handle Butterfly Valve
EBVC = Two- Way Ball Valve
EBVC3L = "L" Port Three Way Ball Valve
EBVC3T = "T" Port Three Way Ball Valve
EBVC-CT = "HOT" Two Way Ball Valve
PPBV = Purge Port Ball Valve
PRS = Product Recovery System
PRVL = "L" Port Pressure Relief Valve
PVRTV = Vacuum & Air Relief Valve
PVRV = Tank Pressure-Vacuum Relief Valve
RSB = Rotating Spray Ball
SSB = Stationary Spray Ball
SV = Sample Valve
THG = Tube Hanger with Grommets
THP = Tube Hanger with PVC Sleeve
TVC = Tank Vent- Clamp End
YBCV = Two Piece Y-Ball Check Valve
YBCVD = Three Piece Y-Ball Check Valve

Part Descriptions to be placed behind the above number:

C or K = Elbow	I = I-Line	VB = Stub End
MP = last two letters of Clamp	Q = Q-line	SL = Slip On
TL = Tangent Long	V = Schedule 5	PRF = Plain Face
W = Weld	X = Schedule 10	TRF = Threaded Face
L = Long	Z = Schedule 40	HR = Rubber Hose
R = Recessless or Roll-on	JP = John Perry	HT = Tygon Hose

Table of Contents

The 3-A symbol ..... Inside Front Cover
Part Number Breakdown 1
Clamp Fittings Section 4-20
Sanitary Buttweld Section 21-33
Bevel Seat Section 34-44
John Perry Section 45-48
Tube OD Section 49-58
I-Line Fittings Section 59-68
Q-Line Fittings Section 69-70
Schedule 5, 10, 40 PIPES to Tube Section 71-77
3-A Sanitary Tube Section 78-79
Sanitary Tube Hangers Section 80-84
Sanitary Gaskets 85-106
3-A Inline and Side Entry Filter/Strainer 107-116
Air Blow Check Valve 118-119
Air Blow Check Valve Material List 120
Spring Check Valve 121
Spring Check Material List 122-123
Y-Ball Two Piece Check Valve 124
Y-Ball Two Piece Check Valve Material List 125-126
Y-Ball Three Piece Check Valve 127
Y-Ball Three Piece Check Valve Material List 128
Two Way Ball Valve 129
Two Way Ball Valve Material List 130-133
High Temperature Two Way Ball Valve 134-135
High Temperature Two Way Ball Valve Material List 136-137
“L” & “T” Port Ball Valve (1/2”—2”) 138-142
“L” & “T” Port Material List (1/2”—2”) 140
“L” & “T” Port Ball Valve (2.5” & 3”) 143-146
“L” & “T” Port Material List (2.5” & 3”) 144
“L” & “T” Port Ball Valve (4”) 147-150
“L” & “T” Port Material List (4”) 148

Table of Contents

Dual Purge Port Ball Valve 151-152
Dual Purge Port Ball Valve Material List 153
Air Actuated Butterfly Valve 154-155
Air Actuated Butterfly Material List 156
Four Position Butterfly Valve (316L) 157-158
Four Position Butterfly Material List (316L) 159
Multi-Position Butterfly Valve (304) 160-161
Multi-Position Butterfly Valve Material List (304) 162
Black Plastic Handle Butterfly Valve 163-164
3A Three Way Rubber Plug Valve (316) 165-166
Air Relief Valve 167-169
Air Relief Valve Material List 168
Tank Pressure-Vacuum Relief Valve 170-172
Vacuum-Air Relief Valve for 2" & 3" Connections 173
Vacuum-Air Relief Valve Material List 147
Tank Vent 175-176
T304 Sample Valves 177-178
Clamp "L" Body Relief Valve 179-180
Clamp "L" Body Material List 181
Clamp "L" or "T" Pressure Relief Valve 182
Clamp "L" or "T" Pressure Relief Material List 183
Product Recovery (PIG System) 184-185
3A Stationary Spray Ball (316L) 186-187
Rotating Spray Ball 188-189
Stationary Spray Ball 190-191
3A Sight Glass 192-193
Custom Fabrications 194-195
Swivel Joints 196-197
Clamp Fitting Sizing Guide 198
Warranty/Return Goods Policy ..... (on back page)

SANITARY SOLUTIONS INC.

Bulldog Fittings/Valves...Bulldog Tough.

Sanitary Solutions Clamp Fittings

Sanitary Solutions Clamp Various Fittings are:

Clamp Fittings Stocking Alloys: T304 or T316L

Clamp Fittings Sizes: ½" – 12" OD Tube

Note: OD Tube and Pipe Sizes do not interchange!

Clamp Fittings Sanitary Finish: 180 Grit Polish ID/OD

A3® 63-03

Sanitary Solutions Clamp Fittings Part Number Breakdown:

SS	Part Number	Size	Alloy
Sanitary Solutions	2CMP	2"	304 or 316L

SS2CMP---- 90° Clamp Elbow, Polish ID/OD

Tube OD (Size)	A	R	Weight	Part Number 304 SS	Part Number 316L SS
1/2"	1.625	1.125	0.31		SS2CMP-0.50-316L
3/4"	1.625	1.125	0.33		SS2CMP-0.75-316L
1"	2.000	1.500	0.35	SS2CMP-1-304	SS2CMP-1-316L
1.5"	2.750	2.250	0.44	SS2CMP-1.5-304	SS2CMP-1.5-316L
2"	3.500	3.000	0.81	SS2CMP-2-304	SS2CMP-2-316L
2.5"	4.250	3.750	1.00	SS2CMP-2.5-304	SS2CMP-2-316L
3"	5.000	4.500	2.00	SS2CMP-3-304	SS2CMP-3-316L
4"	6.625	6.000	3.66	SS2CMP-4-304	SS2CMP-4-316L
6"	9.875	9.000	12.1	SS2CMP-6-304	SS2CMP-6-316L
8"	12.88	12.00	17.0	SS2CMP-8-304	SS2CMP-8-316L *NEW!*
10"	15.88	15.00	27.5	SS2CMP-10-304	SS2CMP-10-316L
12"	18.88	18.00	30.0	SS2CMP-12-304	SS2CMP-12-316L

SS2CMP31MP-- 90° Non Tapered Reducing Clamp Elbow, Polish ID/OD

Tube OD (Size)	A	B	Weight	Part Number 304 SS	Part Number 316L SS
2" x 1"	2.000	2.000	1.00	SS2CMP31MP-2 x 1-304	SS2CMP31MP-2 x 1-316L
2" x 1.5"	2.750	2.750	1.00	SS2CMP31MP-2 x 1.5-304	SS2CMP31MP-2 x 1.5-316L
2.5" x 1.5"	2.750	2.750	1.26	SS2CMP31MP-2.5 x 1.5-304	SS2CMP31MP-2.5 x 1.5-316L
2.5" x 2"	3.500	3.500	1.35	SS2CMP31MP-3 x 1.5-304	SS2CMP31MP-3 x 1.5-316L
3" x 1.5"	2.750	2.750	2.00	SS2CMP31MP-3 x 1.5-304	SS2CMP31MP-3 x 1.5-316L
3" x 2"	3.500	3.500	2.10	SS2CMP31MP-3 x 2-304	SS2CMP31MP-3 x 2-316L
3" x 2.5"	4.250	4.250	2.26	SS2CMP31MP-3 x 2.5-304	SS2CMP31MP-3 x 2.5-316L
4" x 2.5"	4.250	4.250	3.80	SS2CMP31MP-4 x 2.5-304	SS2CMP31MP-4 x 2.5-316L
4" x 3"	5.000	5.125	3.90	SS2CMP31MP-4 x 3-304	SS2CMP31MP-4 x 3-316L

SS2FMP-14-- 90° Clamp by Plain Bevel Seat Ferrule w/ 304 Hex Nut, Polish ID/OD

Tube OD (Size)	A	B	Weight	Part Number 304 SS	Part Number 316L SS
1"	2.000	2.218	0.75	SS2FMP-14-1-304	SS2FMP-14-1-316L
1.5"	2.750	2.968	1.19	SS2FMP-14-1.5-304	SS2FMP-14-1.5-316L
2"	3.500	3.750	2.00	SS2FMP-14-2-304	SS2FMP-14-2-316L
2.5"	4.250	5.375	2.56	SS2FMP-14-2.5-304	SS2FMP-14-2.5-316L
3"	5.000	5.406	4.25	SS2FMP-14-3-304	SS2FMP-14-3-316L
4"	6.625	7.031	8.56	SS2FMP-14-4-304	SS2FMP-14-4-316L

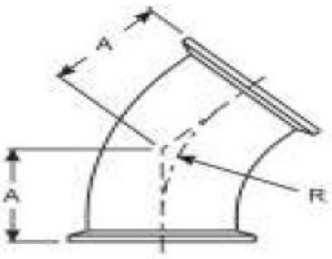

SS2KMP-- 45° Clamp Elbows, Polish ID/OD

Tube OD (Size)	A	R	Weight	Part Number 304 SS	Part Number 316L SS
1/2"	0.966	1.125	0.22		SS2KMP-0.50-316L
3/4"	0.966	1.125	0.24		SS2KMP-0.75-316L
1"	1.125	1.500	0.24	SS2KMP-1-304	SS2KMP-1-316L
1.5"	1.437	2.250	0.31	SS2KMP-1.5-304	SS2KMP-1.5-316L
2"	1.750	3.000	0.50	SS2KMP-2-304	SS2KMP-2-316L
2.5"	2.062	3.750	0.57	SS2KMP-2.5-304	SS2KMP-2.5-316L
3"	2.375	4.500	1.19	SS2KMP-3-304	SS2KMP-3-316L
4"	3.125	6.000	2.25	SS2KMP-4-304	SS2KMP-4-316L
6"	4.625	9.000	7.80	SS2KMP-6-304	SS2KMP-6-316L
8"	5.875	12.00	12.4	SS2KMP-8-304	SS2KMP-8-316L
10"	7.125	15.00	15.0	SS2KMP-10-304	SS2KMP-10-316L *NEW!*
12"	8.375	18.00	17.0	SS2KMP-12-304	SS2KMP-12-316L

SS2WUMP-- Clamp 180° Return Bend, Polish ID/OD

Tube OD (Size)	A	B	Weight	Part Number 304 SS	Part Number 316L SS
1"	3.000	2.500	0.51	SS2WUMP-1-304	SSWUMP-1-316L
1.5"	4.500	3.500	0.89	SS2WUMP-1.5-304	SSWUMP-1.5-316L
2"	6.000	4.500	1.49	SS2WUMP-2-304	SSWUMP-2-316L
2.5"	7.500	5.500	2.09	SS2WUMP-2.5-304	SSWUMP-2.5-316L
3"	9.000	6.500	2.99	SSWUMP-3-304	SSWUMP-3-316L
4"	12.00	8.625	6.35	SSWUMP-4-304	SSWUMP-4-316L

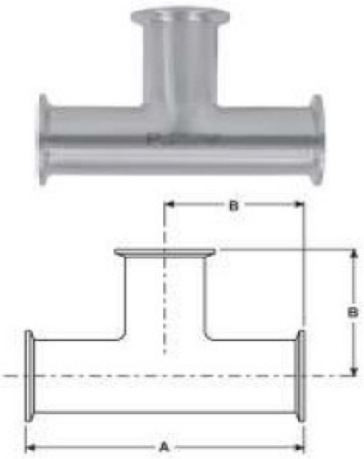

SS7MP--- Clamp Tee, Polish ID/OD

Tube OD (Size)	A	B	Weight	Part Number 304 SS	Part Number 316L SS
1/2"	4.750	2.375	0.40		SS7MP-0.50-316L
3/4"	4.750	2.375	0.40		SS7MP-0.75-316L
1"	4.750	2.375	0.33	SS7MP-1-304	SS7MP-1-316L
1.5"	5.500	2.750	0.63	SS7MP-1.5-304	SS7MP-1.5-316L
2"	7.000	3.500	1.35	SS7MP-2-304	SS7MP-2-316L
2.5"	7.000	3.500	1.50	SS7MP-2.5-304	SS7MP-2.5-316L
3"	7.500	3.750	2.45	SS7MP-3-304	SS7MP-3-316L
4"	9.000	4.500	3.80	SS7MP-4-304	SS7MP-4-316L
6"	13.00	6.500	11.9	SS7MP-6-304	SS7MP-6-316L
8"	15.75	7.875	15.5	SS7MP-8-304	SS7MP-8-316L *NEW!*
10"	18.75	9.375	24.0	SS7MP-10-304	SS7MP-10-316L *NEW!*
12"	21.75	10.375	25.0	SS7MP-12-304	SS7MP-12-316L

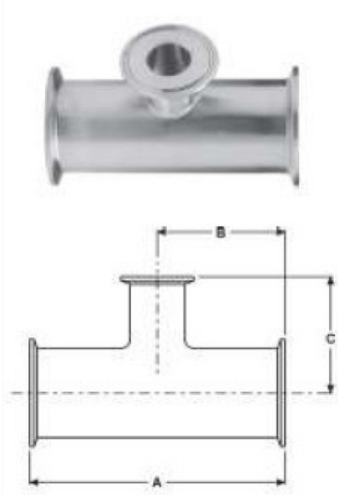

SS7RMP--- Clamp Reducing Tee, Polish ID/OD

Tube OD (Size)	A	B	C	Weight	Part Number 304 SS	Part Number 316L SS
3/4"x 1/2"	5.000	2.500	2.38	0.38		SS7RMP-0.75 x 0.50-316L
1" x 1/2"	5.250	2.625	2.38	0.60		SS7RMP-1 x 0.50-316L
1" x 3/4"	5.250	2.625	2.38	0.60		SS7RMP-1 x 0.75-316L
1.5" x 1/2"	5.750	2.875	2.38	0.60		SS7RMP-1.5 x 0.50-316L
1.5" x 3/4"	5.750	2.875	2.38	0.70		SS7RMP-1.5 x 0.75-316L
1.5" x 1"	4.312	2.156	1.88	1.25	SS7RMP-1.5 x 1-304	SS7RMP-1.5 x 1-316L
2" x 1/2"	5.125	2.562	1.00	1.00	SS7RMP-2 x 1/2-304	SS7RMP-2 x 1/2-304 *NEW!*
2" x 3/4"	5.125	2.562	1.00	1.00	SS7RMP-2 x 3/4-304	SS7RMP-2 x 3/4-304 *NEW!*
2" x 1"	5.125	2.562	2.13	1.35	SS7RMP-2 x 1-304	SS7RMP-2 x 1-316L
2" x 1.5"	5.125	2.562	2.41	1.38	SS7RMP-2 x 1.5-304	SS7RMP-2 x 1.5-316L
2.5" x 1.5"	5.688	2.844	2.66	1.48	SS7RMP-2.5 x 1.5-304	SS7RMP-2.5 x 1.5-316L
2.5" x 2"	5.688	2.844	2.81	1.59	SS7RMP-2.5 x 2-304	SS7RMP-2.5 x 2-316L
3" x 1"	6.188	3.093	1.44	2.40	SS7RMP-3 x 1-304	SS7RMP-3 x 1-316L
3" x 1.5"	6.188	3.093	2.91	2.80	SS7RMP-3 x 1.5-304	SS7RMP-3 x 1.5-316L
3" x 2"	6.188	3.093	3.06	2.50	SS7RMP-3 x 2-304	SS7RMP-3 x 2-316L
3" x 2.5"	6.188	3.093	3.09	2.50	SS7RMP-3 x 2.5-304	SS7RMP-3 x 2.5-316L
4" x 2"	8.125	4.063	3.56	3.36	SS7RMP-4 x 2-304	SS7RMP-4 x 2-316L
4" x 2.5"	8.125	4.063	3.59	3.31	SS7RMP-4 x 2.5-304	SS7RMP-4 x 2.5-316L
4" x 3"	8.125	4.063	3.59	3.67	SS7RMP-4 x 3-304	SS7RMP-4 x 3-316L
6" x 3"	12.63	6.315	6.13	7.75	SS7RMP-6 x 3-304	SS7RMP-6 x 3-316L
6" x 4"	12.75	6.375	6.38	7.86	SS7RMP-6 x 4-304	SS7RMP-6 x 4-316L
8" x 4"	15.75	7.875	6.75	15.0	SS7RMP-8 x 4-304	SS7RMP-8 x 4-316L *NEW!*
8" x 6"	15.75	7.875	7.50	16.5	SS7RMP-8 x 6-304	SS7RMP- 8 x 6-316L *NEW!*

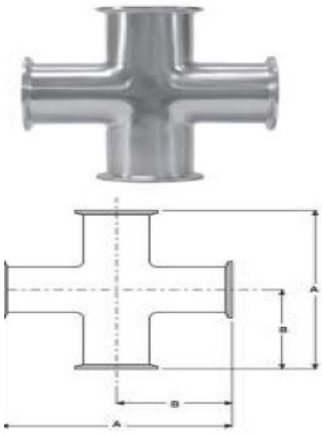

SS9MP--- Clamp Cross, Polish ID/OD

Tube OD (Size)	A	B	Weight	Part Number 304 SS	Part Number 316L SS
1"	4.750	2.375	1.00	SS9MP-1-304	SS9MP-1-316L
1.5"	5.500	2.750	1.00	SS9MP-1.5-304	SS9MP-1.5-316L
2"	7.000	3.500	1.50	SS9MP-2-304	SS9MP-2-316L
2.5"	7.000	3.500	2.00	SS9MP-2.5-304	SS9MP-2.5-316L
3"	7.500	3.750	2.50	SS9MP-3-304	SS9MP-3-316L
4"	9.000	4.500	4.00	SS9MP-4-304	SS9MP-4-316L

SS13MHM---Heavy Duty *Single* Pin Clamp With Open Hole Wing Nut					
Tube OD (Size)	A	SPR @ 70° F *	Weight	Box QTY.	Part Number 304 SS
1/2"-- 3/4"	1.062	1500	0.41	100	SS13MHM-050-075-304
1"-- 1.5"	2.122	500	0.61	100	SS13MHM-1-1.5-304
2"	2.654	450	0.72	100	SS13MHM-2-304
2.5"	3.185	400	0.83	50	SS13MHM-2.5-304
3"	3.717	350	1.05	50	SS13MHM-3-304
4"	4.820	300	1.22	50	SS13MHM-4-304
5"	5.820	225	2.10	25	SS13MHM-5-304
6"	6.695	150	2.72	20	SS13MHM-6-304
8"	8.695	100	3.33	10	SS13MHM-8-304
10"	10.74	100	5.25	10	SS13MHM-10-304
12"	12.74	75	6.50	10	SS13MHM-12-304
** Tighten Wing Nut to 25 in. lb. of torque*					

SS13MHMDP-- Heavy Duty Double Pin Clamp, With Open Hole Wing Nut				
Tube OD (Size)	A	SPR @ 70° F *	Weight	Part Number 304 SS
1"-- 1.5"	2.122	500	0.61	SS13MHMDP-1-1.5-304
2"	2.654	450	0.72	SS13MHMDP-2-304
2.5"	3.185	400	0.83	SS13MHMDP-2.5-304
3"	3.717	350	1.05	SS13MHMDP-3-304
4"	4.820	300	1.22	SS13MHMDP-4-304
** Tighten Wing Nut to 25 in. lb. of torque*				

SS13MHM3P-- Heavy Duty Three Segment Clamp, With Open Hole Wing Nut				
Tube OD (Size)	A	SPR @ 70° F *	Weight	Part Number 304 SS
1"-- 1.5"	2.122	500	0.80	SS13MHM3P-1-1.5-304
2"	2.654	450	0.60	SS13MHM3P-2-304
2.5"	3.185	400	0.70	SS13MHM3P-2.5-304
3"	3.717	350	0.80	SS13MHM3P-3-304
4"	4.820	300	0.90	SS13MHM3P-4-304
** Tighten Wing Nut to 25 in. lb. of torque*				

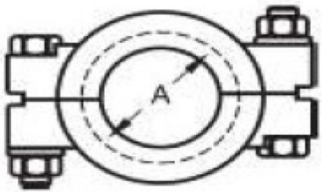

SS13MHP-- Heavy Duty Bolted Clamp

Tube OD (Size)	A	SPR @ 70° F *	Weight	Part Number 304 SS	
1/2"-- 3/4"	1.062	1500	0.44	SS13MHP-050-075-304	
1"-- 1.5"	2.046	1500	0.77	SS13MHP-1-1.5-304	
2"	2.578	1000	0.86	SS13MHP-2-304	
2.5"	3.110	1000	0.97	SS13MHP-2.5-304	
3"	3.460	1000	1.12	SS13MHP-3-304	
4"	4.744	800	1.42	SS13MHP-4-304	
6"	6.632	300	2.81	SS13MHP-6-304	
8"	8.638	250	3.00	SS13MHP-8-304	*NEW!*
10"	10.74	200	4.40	SS13MHP-10-304	*NEW!*
12"	12.74	150	CALL	SS13MHP-12-304	

** Tighten Bronze Nut to 20 Ft. lb. of torque*

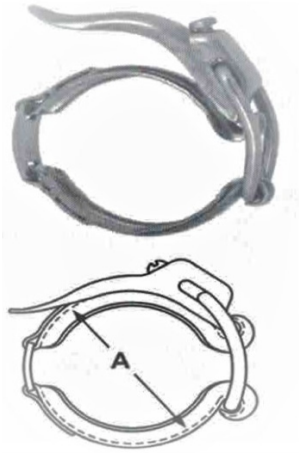

SS13MHLA -- Adjustable Light Duty Toggle Clamp

Tube OD (Size)	A	SPR @ 70° F *	Weight	Part Number 304 SS	
1"-- 1.5"	2.122	150	0.61	SS13MHLA-1-1.5-304	*NEW!*
2"	2.654	150	0.72	SS13MHLA-2-304	*NEW!*
2.5"	3.185	150	0.83	SS13MHLA-2.5-304	*NEW!*
3"	3.717	150	1.05	SS13MHLA-3-304	*NEW!*
4"	4.820	100	1.22	SS13MHLA-4-304	*NEW!*

SS13OHWN-- Open Hole Wing Nut

(Size)	Weight		Part Number 304 SS
OSFA	0.10		SS13OHWN

One Size Fits All (OSFA)

SS13SWN-- Serrated Wing Nut

(Size)	Weight		Part Number 304 SS
OSFA	0.10		SS13SWN

One Size Fits All (OSFA)

SS14WMP-- *Short* Welding Ferrule

Tube OD (Size)	A	B	C	Weight	Part Number 304 SS	Part Number 316L SS
1/2"	0.500	0.370	0.500	0.04		SS14WMP-0.50-316L
3/4"	0.500	0.620	0.750	0.05		SS14WMP-0.75-316L
1"	0.500	0.870	1.000	0.12	SS14WMP-1-304	SS14WMP-1-316L
1.5"	0.500	1.370	1.500	0.13	SS14WMP-1.5-304	SS14WMP-1.5-316L
2"	0.500	1.870	2.000	0.22	SS14WMP-2-304	SS14WMP-2-316L
2.5"	0.500	2.370	2.500	0.26	SS14WMP-2.5-304	SS14WMP-2.5-316L
3"	0.500	2.870	3.000	0.33	SS14WMP-3-304	SS14WMP-3-316L
4"	0.625	3.834	4.000	0.57	SS14WMP-4-304	SS14WMP-4-316L
5"	0.750	4.782	5.000	0.57	SS14WMP-5-304	SS14WMP-5-316L *NEW!*
6"	0.875	5.782	6.000	0.42	SS14WMP-6-304	SS14WMP-6-316L
8"	0.875	7.782	8.000	1.25	SS14WMP-8-304	SS14WMP-8-316L
10"	0.875	9.782	10.00	2.00	SS14WMP-10-304	SS14WMP-10-316L
12"	0.875	11.76	12.00	2.00	SS14WMP-12-304	SS14WMP-12-316L

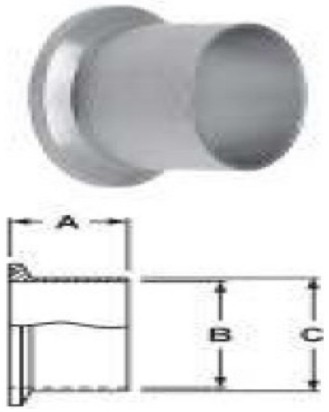

SSL14AM7-- *Long* Buttweld Ferrule

Tube OD (Size)	A	B	C	Weight	Part Number 304 SS	Part Number 316L SS
1/2"	1.125	0.370	0.500	0.04		SSL14AM7-0.50-316L
3/4"	1.125	0.620	0.750	0.04		SSL14AM7-0.75-316L
1"	1.125	0.870	1.000	0.09	SSL14AM7-1-304	SSL14AM7-1-316L
1.5"	1.125	1.370	1.500	0.13	SSL14AM7-1.5-304	SSL14AM7-1.5-316L
2"	1.125	1.870	2.000	0.20	SSL14AM7-2-304	SSL14AM7-2-316L
2.5"	1.125	2.370	2.500	0.25	SSL14AM7-2.5-304	SSL14AM7-2.5-316L
3"	1.125	2.870	3.000	0.31	SSL14AM7-3-304	SSL14AM7-3-316L
4"	1.125	3.834	4.000	0.56	SSL14AM7-4-304	SSL14AM7-4-316L
5"	1.125	4.782	5.000	0.90	SSL14AM7-5-304	SSL14AM7-5-316L *NEW!*
6"	1.500	5.782	6.000	1.20	SSL14AM7-6-304	SSL14AM7-6-316L
8"	1.500	7.782	8.000	1.75	SSL14AM7-8-304	SSL14AM7-8-316L
10"	1.750	9.782	10.00	3.00	SSL14AM7-10-304	SSL14AM7-10-316L
12"	1.750	11.76	12.00	3.00	SSL14AM7-12-304	SSL14AM7-12-316L

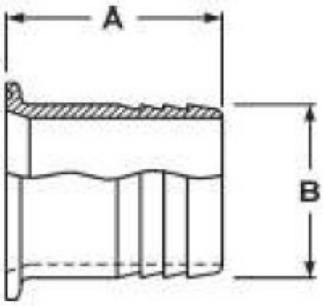

SS14MPHR-- Clamp *Rubber Hose Barb* Adapter

Tube OD (Size)	A	B	Weight	Part Number 304 SS	Part Number 316L SS
1/2" x 1/8"	1.250	0.125	NA		SS14MPHR- 1/2 x 1/8- 316L
1/2" x 1/4"	1.500	0.250	NA		SS14MPHR- 1/2 x 1/4- 316L
1/2" x 3/8"	1.500	0.375	NA		SS14MPHR- 1/2 x 3/8- 316L
1/2" x 1/2"	1.500	0.500	0.10		SS14MPHR- 1/2 - 316L
1/2" x 3/4"	1.500	0.750	NA		SS14MPHR- 1/2 x 3/4- 316L
3/4" x 1/8"	1.500	0.125	NA		SS14MPHR- 3/4 x 1/8- 316L
3/4" x 1/4"	1.500	0.250	NA		SS14MPHR- 3/4 x 1/4- 316L
3/4" x 3/8"	1.500	0.375	NA		SS14MPHR- 3/4 x 3/8- 316L
3/4" x 1/2"	1.500	0.500	NA		SS14MPHR- 3/4 x 1/2- 316L
3/4" x 3/4"	1.500	0.750	0.11		SS14MPHR- 3/4 - 316L
1" x 1"	1.688	1.000	0.15	SS14MPHR-1-304	SS14MPHR-1-316L
1" x 3/8"	1.500	0.375	NA	SS14MPHR-1 x 3/8-304	SS14MPHR-1 x 3/8-316L
1" x 1/2"	1.500	0.500	NA	SS14MPHR-1 x 1/2-304	SS14MPHR-1 x 1/2-316L
1" x 3/4"	1.688	0.750	NA	SS14MPHR-1 x 3/4-304	SS14MPHR-1 x 3/4-316L
1.5" x 1/8"	1.500	0.125	NA	SS14MPHR-1.5 x 1/8-304	SS14MPHR-1.5 x 1/8-316L
1.5" x 1/4"	1.500	0.250	NA	SS14MPHR-1.5 x 1/4-304	SS14MPHR-1.5 x 1/4-316L
1.5" x 3/8"	1.500	0.375	NA	SS14MPHR-1.5 x 3/8-304	SS14MPHR-1.5 x 3/8-316L
1.5" x 1/2"	1.500	0.500	0.58	SS14MPHR-1.5 x 1/2-304	SS14MPHR-1.5 x 1/2-316L
1.5" x 3/4"	1.500	0.750	0.58	SS14MPHR-1.5 x 3/4-304	SS14MPHR-1.5 x 3/4-316L
1.5" x 1"	1.688	1.000	0.83	SS14MPHR-1.5 x 1-304	SS14MPHR-1.5 x 1-316L
1.5" x 1.5"	1.688	1.500	NA	SS14MPHR-1.5-304	SS14MPHR-1.5-316L
2" x 1.5"	2.312	1.500	NA	SS14MPHR-2 x 1.5-304	SS14MPHR-2 x 1.5-316L
2" x 2"	2.313	2.000	1.01	SS14MPHR-2-304	SS14MPHR-2-316L
2.5" x 2.5"	2.344	2.500	0.83	SS14MPHR-2.5-304	SS14MPHR-2.5-316L
3" x 3"	3.094	3.000	1.15	SS14MPHR-3-304	SS14MPHR-3-316L
4" x 4"	3.406	4.000	1.55	SS14MPHR-4-304	SS14MPHR-4-316L
6" x 6"	4.500	6.000	2.5	SS14MPHR-6-304	SS14MPHR-6-316L *NEW!*
8" x 8"	4.500	8.000	NA	SS14MPHR-8-304	SS14MPHR-8-316L

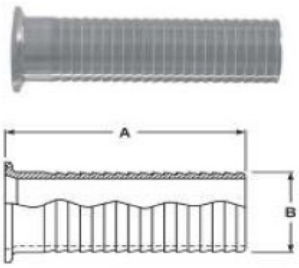

SS14MPHRL-- *LONG* Clamp Rubber Hose Barb Adapter

Tube OD (Size)	A	B	Weight	Part Number 304 SS
1"	3.500	1.045	0.30	SS14MPHRL-1-304
1.5"	5.000	1.545	0.50	SS14MPHRL-1.5-304
2"	5.000	2.045	0.75	SS14MPHRL-2-304
2.5"	5.500	2.545	1.38	SS14MPHRL-2.5-304
3"	5.500	3.045	1.19	SS14MPHRL-3-304
4"	5.500	4.045	2.00	SS14MPHRL-4-304

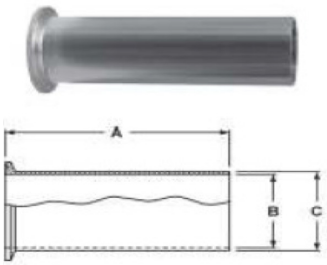

SS14MPHT-- Clamp *Tygon*® Hose Adapter

Tube OD (Size)	A	B	C	Weight	Part Number 304 SS 3A	Part Number 316L SS 3A
1/2"	4.000	0.370	0.500	CALL		SS14MPHT-0.50-316L
3/4"	4.000	0.620	0.750	CALL		SS14MPHT-0.75-316L
1"	4.500	0.870	1.000	0.10	SS14MPHT-1-304	SS14MPHT-1-316L
1.5"	4.500	1.370	1.500	0.10	SS14MPHT-1.5-304	SS14MPHT-1.5-316L
2"	4.500	1.870	2.000	0.50	SS14MPHT-2-304	SS14MPHT-2-316L
2.5"	4.500	2.370	2.500	0.50	SS14MPHT-2.5-304	SS14MPHT-2.5-316L
3"	4.500	2.870	3.000	1.00	SS14MPHT-3-304	SS14MPHT-3-316L
4"	4.625	3.834	4.000	1.50	SS14MPHT-4-304	SS14MPHT-4-316L
6"	6.000	5.782	6.000	3.90	SS14MPHT-6-304	SS14MPHT-6-316L
8"	6.000	7.782	8.000	4.90	SS14MPHT-8-304	SS14MPHT-8-316L *NEW!*

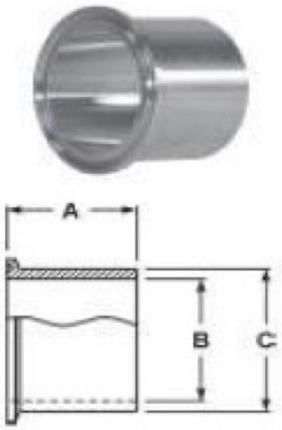

SS14MPW-- *Heavy Wall Tank* Weld Ferrule

Tube OD (Size)	A	B	C	Weight	Part Number 304 SS 3A	Part Number 316L SS 3A
1/2"	1.625	0.321	0.502	0.04		SS14MPW- 0.50-316L
3/4"	1.625	0.574	0.750	0.05		SS14MPW-0.75-316L
1"	1.625	0.870	1.160	0.12	SS14MPW-1-304	SS14MPW-1-316L
1.5"	1.625	1.370	1.676	0.13	SS14MPW-1.5-304	SS14MPW-1.5-316L
2"	1.750	1.870	2.192	0.22	SS14MPW-2-304	SS14MPW-2-316L
2.5"	1.750	2.370	2.708	0.26	SS14MPW-2.5-304	SS14MPW-2.5-316L
3"	1.813	2.870	3.224	0.33	SS14MPW-3-304	SS14MPW-3-316L
4"	2.125	3.834	4.256	0.57	SS14MPW-4-304	SS14MPW-4-316L
6"	2.500	5.758	6.192	0.42	SS14MPW-6-304	SS14MPW-6-316L *NEW!*
8"	2.500	7.758	8.192	1.25	SS14MPW-8-304	SS14MPW-8-316L *NEW!*

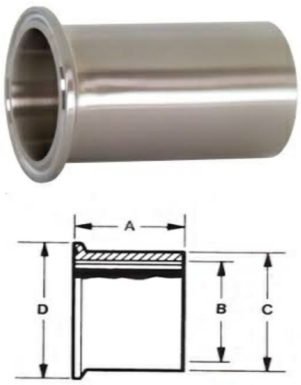

SS14MPWL-- *Long Heavy Wall Tank* Weld Ferrule

Tube OD (Size)	A	B	C	Weight	Part Number 304 SS	Part Number 316L SS
1"	3.000	0.870	1.160	0.18	SS14MPWL-1-304	SS14MPWL-1-316L *NEW!*
1.5"	3.000	1.370	1.676	0.25	SS14MPWL-1.5-304	SS14MPWL-1.5-316L *NEW!*
2"	4.000	1.870	2.192	0.45	SS14MPWL-2-304	SS14MPWL-2-316L
2.5"	4.000	2.370	2.708	0.59	SS14MPWL-2.5-304	SS14MPWL-2.5-316L
3"	6.000	2.870	3.224	0.82	SS14MPWL-3-304	SS14MPWL-3-316L
4"	6.000	3.834	4.256	1.31	SS14MPWL-4-304	SS14MPWL-4-316L
6"	6.000	5.758	6.192	2.06	SS14MPWL-6-304	SS14MPWL-6-316L *NEW!*

SS14RMP-- Roll-On Expanding Ferrule

Tube OD (Size)	A	B	Weight	Part Number 304 SS	Part Number 316L SS
1"	0.750	1.005	0.13	SS14RMP-1-304	SS14RMP-1-316L
1.5"	1.125	1.505	0.13	SS14RMP-1.5-304	SS14RMP-1.5-316L
2"	1.312	2.005	0.25	SS14RMP-2-304	SS14RMP-2-316L
2.5"	1.375	2.505	0.34	SS14RMP-2.5-304	SS14RMP-2.5-316L
3"	1.437	3.005	0.47	SS14RMP-3-304	SS14RMP-3-316L
4"	1.500	4.005	0.70	SS14RMP-4-304	SS14RMP-4-316L
6"	2.000	6.005	1.40	SS14RMP-6-304	SS14RMP-6-316L

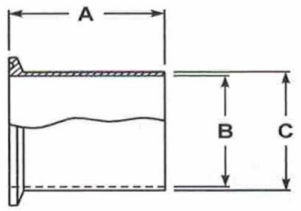

SST14AM7-- Automatic Weld Ferrule

Tube OD (Size)	A	B	C	Weight	Part Number 316L
1/2"	1.750	0.370	0.500	0.04	SST14AM7- 0.50-316L *NEW!*
3/4"	1.750	0.620	0.750	0.04	SST14AM7- 0.75-316L *NEW!*
1"	1.750	0.870	1.000	0.09	SST14AM7-1-316L *NEW!*
1.5"	1.750	1.370	1.500	0.13	SST14AM7-1.5-316L *NEW!*
2"	2.250	1.870	2.000	0.20	SST14AM7-2-316L *NEW!*
2.5"	2.250	2.370	2.500	0.25	SST14AM7-2.5-316L *NEW!*
3"	2.250	2.870	3.000	0.31	SST14AM7- 3-316L *NEW!*
4"	2.250	3.830	4.000	0.56	SST14AM7-4-316L *NEW!*
6"	3.000	5.780	6.000	1.50	SST14AM7-6-316L *NEW!*

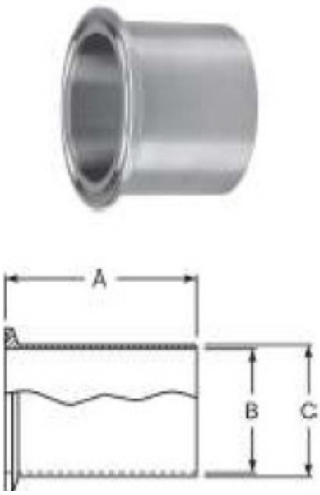

SS14WLMP-- *Light Wall* Tank Ferrule

Tube OD (Size)	A	B	C	Weight	Part Number 304 SS	Part Number 316L
1"	3.000	0.870	1.000	0.18	SS14WLMP-1-304	SS14WLMP-1-316L
1.5"	3.000	1.320	1.500	0.25	SS14WLMP-1.5-304	SS14WLMP-1.5-316L
2"	3.000	1.870	2.000	0.45	SS14WLMP-2-304	SS14WLMP-2-316L
2.5"	3.000	2.370	2.500	0.59	SS14WLMP-2.5-304	SS14WLMP-2.5-316L
3"	4.000	2.870	3.000	0.82	SS14WLMP-3-304	SS14WLMP-3-316L
4"	4.000	3.834	4.000	1.31	SS14WLMP-4-304	SS14WLMP-4-316L
6"	6.000	5.782	6.000	2.06	SS14WLMP-6-304	SS14WLMP-6-316L
8"	6.000	7.760	8.000	CALL	SS14WLMP-8-304	SS14WLMP-8-316L
10"	6.000	9.782	10.00	CALL	SS14WLMP-10-304	SS14WLMP-10-316L
12"	6.000	11.76	12.00	CALL	SSL14WLMP-12-304	SSL14WLMP-12-316L

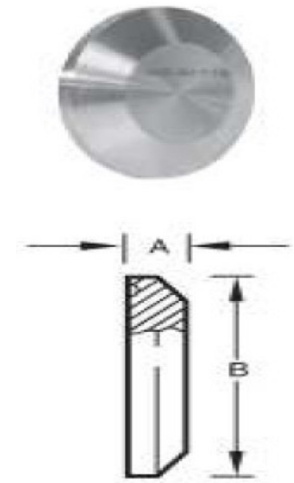

SS16AMP-- Clamp Solid End Cap

Tube OD (Size)	A	B	Weight	Part Number 304 SS	Part Number 316L SS
1/2"-- 3/4"	0.187	0.992	0.03		SS16AMP-050-075-316L
1"-- 1.5"	0.250	1.984	0.15	SS16AMP-1-1.5-304	SS16AMP-1-1.5-316L
2"	0.250	2.516	0.31	SS16AMP-2-304	SS16AMP-2-316L
2.5"	0.250	3.047	0.44	SS16AMP-2.5-304	SS16AMP-2.5-316L
3"	0.250	3.579	0.90	SS16AMP-3-304	SS16AMP-3-316L
4"	0.312	4.682	1.25	SS16AMP-4-304	SS16AMP-4-316L
5"	0.312	5.687	1.85	SS16AMP-5-304	SS16AMP-5-316L
6"	0.438	6.570	3.95	SS16AMP-6-304	SS16AMP-6-316L
8"	0.438	8.570	7.06	SS16AMP-8-304	SS16AMP-8-316L
10"	0.438	10.57	10.0	SS16AMP-10-304	SS16AMP-10-316L
12"	0.438	12.67	12.0	SS16AMP-12-304	SS16AMP-12-316L

SS17MP-14--Clamp x Plain Bevel Seat Ferrule w/ (304) Hex Nut Adapter

Tube OD (Size)	A	Weight	Part Number 304 SS	Part Number 316L SS
1"	3.000	0.63	SS17MP-14-1-304	SS17MP-14-1-316L
1.5"	3.000	0.88	SS17MP-14-1.5-304	SS17MP-14-1.5-316L
2"	3.000	1.38	SS17MP-14-2-304	SS17MP-14-2-316L
2.5"	3.500	2.06	SS17MP-14-2.5-304	SS17MP-14-2.5-316L
3"	3.750	2.81	SS17MP-14-3-304	SS17MP-14-3-316L
4"	4.000	5.25	SS17MP-14-4-304	SS17MP-14-4-316L

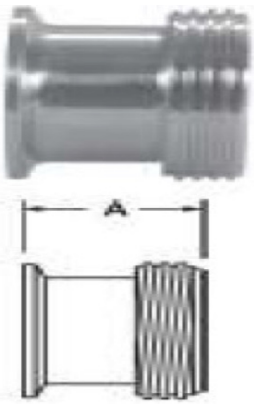

SS17MP-15--Clamp x Thread Bevel Seat Ferrule Adapter, Polish ID/OD

Tube OD (Size)	A	Weight	Part Number 304 SS 3A	Part Number 316L SS 3A
1"	1.688	0.31	SS17MP-15-1-304	SS17MP-15-1-316L
1.5"	1.719	0.38	SS17MP-15-1.5-304	SS17MP-15-1.5-316L
2"	1.719	0.56	SS17MP-15-2-304	SS17MP-15-2-316L
2.5"	1.844	0.75	SS17MP-15-2.5-304	SS17MP-15-2.5-316L
3"	1.906	0.94	SS17MP-15-3-304	SS17MP-15-3-316L
4"	2.344	1.69	SS17MP-15-4-304	SS17MP-15-4-316L

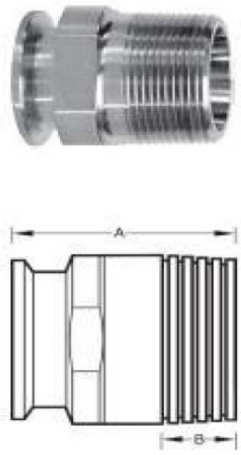

SS21MP-- Clamp x (MNPT) Adapter

Tube OD (Size)	A	B	Weight	Part Number 304 3A	Part Number 316L 3A	
1/2" x 1/2"	1.625	0.782	0.35	SS21MP-1/2 x 1/2-304	SS21MP-1/2 x 1/2-316L	
3/4" x 1/2"	2.000	0.782	0.35	SS21MP-3/4 x 1/2-304	SS21MP-3/4 x 1/2-316L	*NEW!*
1" x 1/2"	2.187	0.782	0.35	SS21MP-1 x 1/2-304	SS21MP-1 x 1/2-316L	*NEW!*
1" x 3/4"	2.187	0.794	1.00	SS21MP-1 x 3/4-304	SS21MP-1 x 3/4-316L	*NEW!*
1" x 1"	2.250	0.985	1.00	SS21MP-1-304	SS21MP-1-316L	
1.5" x 1/2"	2.187	0.782	0.48	SS21MP-1.5 x 1/2-304	SS21MP-1.5 x 1/2-316L	*NEW!*
1.5" x 3/4"	2.187	0.794	0.80	SS21MP-1.5 X 3/4-304	SS21MP-1.5 x 3/4-316L	
1.5" x 1"	2.437	0.985	0.48	SS21MP-1.5 x 1-304	SS21MP-1.5 x 1-316L	
1.5" x 1.25"	2.438	1.009	0.50	SS21MP-1.5 x 1.25-304	SS21MP-1.5 x 1.25-316L	*NEW!*
2" x 1"	2.469	0.985	0.50	SS21MP-2 x 1-304	SS21MP-2 x 1-316L	
2" x 1.5"	2.625	1.009	0.63	SS21MP-2 x 1.5-304	SS21MP-2 x 1.5-316L	
1.5" x 1.5"	2.250	1.025	0.63	SS21MP-1.5-304	SS21MP-1.5-316L	
2" x 1"	2.469	0.985	0.63	SS21MP-2 x 1-304	SS21MP-2 x 1-316L	
2" x 1.5"	2.625	1.009	0.63	SS21MP-2 x 1.5-304	SS21MP-2 x 1.5-316L	
2" x 2"	2.638	1.058	0.63	SS21MP-2-304	SS21MP-2-316L	
2.5" x 2.5"	2.875	1.571	1.50	SS21MP-2.5-304	SS21MP-2.5-316L	
3" x 3"	3.070	1.634	2.00	SS21MP-3-304	SS21MP-3-316L	
4" x 4"	3.155	1.734	3.50	SS21MP-4-304	SS21MP-4-316L	

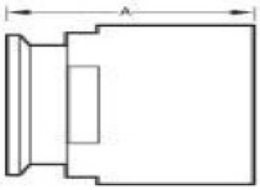

SS22MP-- Clamp x (FNPT) Adapter

Tube OD (Size)	A	Weight	Part Number 304 SS	Part Number 316L SS
1/2" x 1/2"	1.50	0.30		SS22MP-0.50-316L
3/4" x 3/4"	1.625	0.30		SS22MP-0.75-316L
1" x 1"	1.625	0.10	SS22MP-1-304	SS22MP-1-316L
1.5" x 1.5"	2.250	0.38	SS22MP-1.5-304	SS22MP-1.5-316L
2" x 2"	2.344	1.13	SS22MP-2-304	SS22MP-2-316L
2.5" x 2.5"	2.093	1.00	SS22MP-2.5-304	SS22MP-2.5-316L
3" x 3"	2.187	2.75	SS22MP-3-304	SS22MP-3-316L
4" x 4"	3.652	3.80	SS22MP-4-304	SS22MP-4-316L

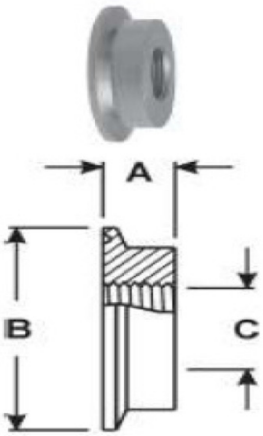

SS23BMP-- Clamp Thermometer Cap

Tube OD (Size)	A	B	C	Weight	Part Number 304 SS	Part Number 316L SS
1/2"	0.500	0.993	1/4" NPT	CALL		SS23BMP- 0.50-316L
3/4"	0.500	0.993	1/4" NPT	CALL		SS23BMP-0.75-316L
1"	0.625	1.984	1/2" NPT	0.18	SS23BMP-1-304	SS23BMP-1-316L
1.5"	0.625	1.984	3/4" NPT	0.25	SS23BMP-1.5-304	SS23BMP-1.5-316L
2"	0.625	2.516	3/4" NPT	0.45	SS23BMP-2-304	SS23BMP-2-316L
2.5"	0.625	3.047	3/4" NPT	0.59	SS23BMP-2.5-304	SS23BMP-2.5-316L
3"	0.625	3.579	3/4" NPT	0.82	SS23BMP-3-304	SS23BMP-3-316L
4"	0.625	4.682	3/4" NPT	1.31	SS23BMP-4-304	SS23BMP-4-316L

Other NPT Sizes Available

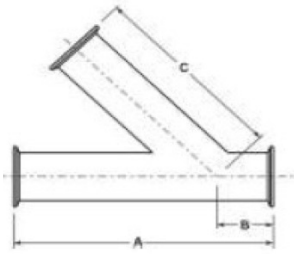

SS28LMP-- Clamp *Lateral "Y"*, Polish ID/OD

Tube OD (Size)	A	B	C	Weight	Part Number 304 SS	Part Number 316L SS
1"	7.000	1.500	5.50	1.10	SS28LMP-1-304	SS28LMP-1-316L
1.5"	8.375	2.430	7.43	1.25	SS28LMP-1.5-304	SS28LMP-1.5-316L
2"	9.750	2.125	7.63	2.10	SS28LMP-2-304	SS28LMP-2-316L
2.5"	11.000	2.000	9.00	2.45	SS28LMP-2.5-304	SS28LMP-2.5-316L
3"	11.750	2.375	9.38	3.15	SS28LMP-3-304	SS28LMP-3-316L
4"	14.062	2.640	11.31	5.35	SS28LMP-4-304	SS28LMP-4-316L
6"	18.250	5.000	16.38	20.0	SS28LMP-6-304	SS28LMP-6-316L

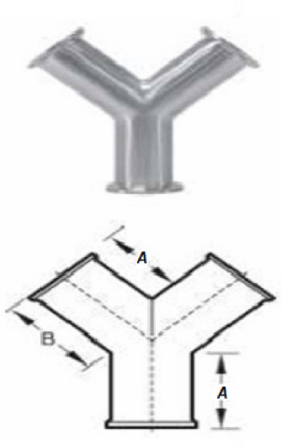

SS28YMP-- Clamp True *"Y"*, Polish ID/OD

Tube OD (Size)	A	B	Weight	Part Number 304 SS	Part Number 316L SS
1"	2.500	2.938	1.10	SS28YMP-1-304	SS28YMP-1-316L
1.5"	2.500	2.938	1.25	SS28YMP-1.5-304	SS28YMP-1.5-316L
2"	3.125	3.750	2.10	SS28YMP-2-304	SS28YMP-2-316L
2.5"	3.875	4.625	2.45	SS28YMP-2.5-304	SS28YMP-2.5-316L
3"	4.500	5.375	3.15	SS28YMP-3-304	SS28YMP-3-316L
4"	5.875	7.062	5.35	SS28YMP-4-304	SS28YMP-4-316L
6"	8.688	9.500	17.0	SS28YMP-6-304	SS28YMP-6-316L

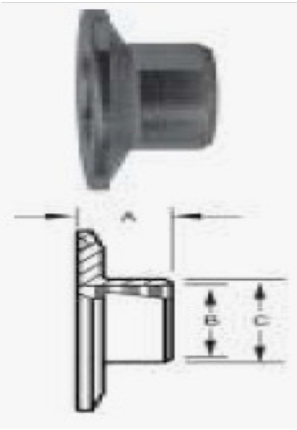

SS31RMP-- Roll-On (Reducing) Ferrule

Tube OD (Size)	A	B	C	Weight	Part Number 304 SS	Part Number 316L SS
1.5" x 1"	0.750	1.007	1.16	CALL	SS31RMP-1.5 x 1-304	SS31RMP-1.5 x 1-316L
2" x 1"	0.750	1.007	1.16	CALL	SS31RMP-2 x 1-304	SS31RMP-2 x 1-316L
2" x 1.5"	1.125	1.507	1.68	CALL	SS31RMP-2 x 1.5-304	SS31RMP-2 x 1.5-316L
2.5" x 1.5"	1.125	1.507	1.68	CALL	SS31RMP-2.5 x 1.5-304	SS31RMP-2.5 x 1.5-316L
2.5" x 2"	1.125	2.007	2.19	CALL	SS31RMP-2.5 x 2-304	SS31RMP-2.5 x 2-316L
3" x 1.5"	1.313	1.507	1.68	CALL	SS31RMP-3 x 1.5-304	SS31RMP-3 x 1.5-316L
3" x 2"	1.313	2.007	2.19	CALL	SS31RMP-3 x 2-304	SS31RMP-3 x 2-316L
4" x 2.5"	1.375	2.507	2.69	CALL	SS31RMP-4 x 2.5-304	SS31RMP-4 x 2.5-316L
4" x 3"	1.375	3.007	3.22	CALL	SS31RMP-4 x 3-304	SS31RMP-4 x 3-316L

SS31-14MP--- Clamp x Clamp *Concentric* Reducer, Polish ID/OD				
Tube OD (Size)	A	Weight	Part Number 304 SS 3A	Part Number 316L SS 3A
3/4" x 1/2"	2.000	0.25		SS31-14MP-.75 x 0.50- 316L
1" x 1/2"	2.000	0.27		SS31-14MP-1 x 0.50- 316L
1" x 3/4"	2.000	0.27		SS31-14MP-1 x 0.75- 316L
1.5" x 1/2"	3.000	0.31		SS31-14MP-1.5 x 0.50- 316L
1.5" x 3/4"	3.000	0.31		SS31-14MP-1.5 x 0.75- 316L
1.5" x 1"	3.000	0.29	SS31-14MP-1.5 x 1- 304	SS31-14MP-1.5 x 1- 316L
2" x 1/2"	7.000	0.65		SS31-14MP- 2 x 0.50-316L
2" x 3/4"	6.000	0.65		SS31-14MP- 2 x 0.75-316L
2" x 1"	5.000	0.70	SS31-14MP-2 x 1- 304	SS31-14MP-2 x 1- 316L
2" x 1.5"	3.000	0.40	SS31-14MP-2 x 1.5- 304	SS31-14MP-2 x 1.5- 316L
2.5" x 1.5"	5.000	0.63	SS31-14MP-2.5 x 1.5- 304	SS31-14MP-2.5 x 1.5- 316L
2.5" x 2"	3.000	0.53	SS31-14MP-2.5 x 2- 304	SS31-14MP-2.5 x 2- 316L
3" x 1"	9.000	1.18	SS31-14MP-3 x 1- 304	SS31-14MP-3 x 1- 316L
3" x 1.5"	7.000	1.24	SS31-14MP-3 x 1.5- 304	SS31-14MP-3 x 1.5- 316L
3" x 2"	5.000	1.09	SS31-14MP-3 x 2- 304	SS31-14MP-3 x 2- 316L
3" x 2.5"	3.000	0.75	SS31-14MP-3 x 2.5- 304	SS31-14MP-3 x 2.5- 316L
4" x 1.5"	11.13	1.17	SS31-14MP-4 x 1.5- 304	SS31-14MP-4 x 1.5- 316L
4" x 2"	9.125	1.25	SS31-14MP-4 x 2- 304	SS31-14MP-4 x 2- 316L
4" x 2.5"	7.125	1.50	SS31-14MP-4 x 2.5- 304	SS31-14MP-4 x 2.5- 316L
4" x 3"	5.125	1.15	SS31-14MP-4 x 3- 304	SS31-14MP-4 x 3- 316L
6" x 2"	6.875	2.60	SS31-14MP-6 x 2- 304	SS31-14MP-6 x 2- 316L
6" x 3"	6.875	2.60	SS31-14MP-6 x 3- 304	SS31-14MP-6 x 3- 316L
6" x 4"	7.000	1.92	SS31-14MP-6 x 4- 304	SS31-14MP-6 x 4- 316L
8" x 4"	7.500	5.50	SS31-14MP-8 x 4- 304	SS31-14MP-8 x 4- 316L
8" x 6"	7.750	6.50	SS31-14MP-8 x 6-304	SS31-14MP-8 x 6-316L

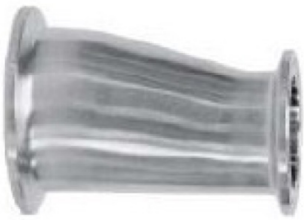

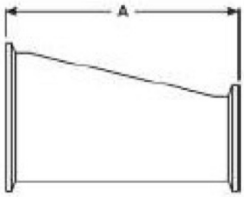

SS32-14MP--- Clamp x Clamp *Eccentric* Reducer, Polish ID/OD				
Tube OD (Size)	A	Weight	Part Number 304 SS	Part Number 316L SS
3/4" x 1/2"	2.000	0.25		SS32-14MP-.75 x 0.50- 316L
1" x 1/2"	2.000	0.27		SS32-14MP-1 x 0.50- 316L
1" x 3/4"	2.000	0.27		SS32-14MP-1 x 0.75- 316L
1.5" x 1/2"	3.000	0.31		SS32-14MP-1.5 x 0.50- 316L
1.5" x 3/4"	3.000	0.31		SS32-14MP-1.5 x 0.75- 316L
1.5" x 1"	3.000	0.29	SS32-14MP-1.5 x 1- 304	SS32-14MP-1.5 x 1- 316L
2" x 1"	5.000	0.70	SS32-14MP-2 x 1- 304	SS32-14MP-2 x 1- 316L
2" x 1.5"	3.000	0.40	SS32-14MP-2 x 1.5- 304	SS32-14MP-2 x 1.5- 316L
2.5" x 1.5"	5.000	0.63	SS32-14MP-2.5 x 1.5- 304	SS32-14MP-2.5 x 1.5- 316L
2.5" x 2"	3.000	0.53	SS32-14MP-2.5 x 2- 304	SS32-14MP-2.5 x 2- 316L
3" x 1"	9.000	1.20	SS32-14MP-3 x 1- 304	SS32-14MP-3 x 1- 316L
3" x 1.5"	7.000	1.24	SS32-14MP-3 x 1.5- 304	SS32-14MP-3 x 1.5- 316L
3" x 2"	5.000	1.09	SS32-14MP-3 x 2- 304	SS32-14MP-3 x 2- 316L
3" x 2.5"	3.000	0.75	SS32-14MP-3 x 2.5- 304	SS32-14MP-3 x 2.5- 316L
4" x 1.5"	11.13	1.58	SS32-14MP-4 x 1.5- 304	SS32-14MP-4 x 1.5- 316L
4" x 2"	9.125	1.66	SS32-14MP-4 x 2- 304	SS32-14MP-4 x 2- 316L
4" x 2.5"	7.125	0.75	SS32-14MP-4 x 2.5- 304	SS32-14MP-4 x 2.5- 316L
4" x 3"	5.125	1.15	SS32-14MP-4 x 3- 304	SS32-14MP-4 x 3- 316L
6" x 2"	6.875	2.60	SS32-14MP-6 x 2- 304	SS32-14MP-6 x 2- 316L
6" x 3"	6.875	2.60	SS32-14MP-6 x 3- 304	SS32-14MP-6 x 3- 316L
6" x 4"	7.000	1.92	SS32-14MP-6 x 4- 304	SS32-14MP-6 x 4- 316L
8" x 4"	7.500	6.15	SS32-14MP-8 x 4- 304	SS32-14MP-8 x 4- 316L
8" x 6"	7.750	6.60	SS32-14MP-8 x 6-304	SS32-14MP-8 x 6-316L

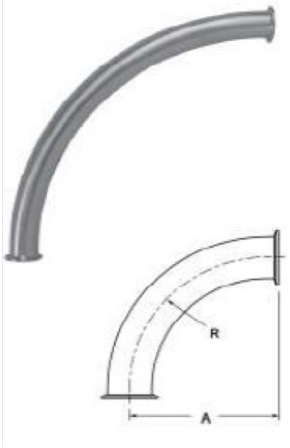

SS2SXLMP-- 12" Clamp Sweep Elbow, Polish ID/OD				
Tube OD (Size)	A	R	Weight	Part Number 316L SS
1/2"	12.50	12.00	1.08	SS2SXLMP-0.50-12-316L
1"	12.50	12.00	1.74	SS2SXLMP-1-12-316L
1.5"	12.50	12.00	2.46	SS2SXLMP-1.5-12-316L
2"	12.50	12.00	3.44	SS2SXLMP-2-12-316L
2.5"	12.50	12.00	4.27	SS2SXLMP-2.5-12-316L
3"	12.50	12.00	5.16	SS2SXLMP-3-12-316L
4"	12.63	12.00	8.84	SS2SXLMP-4-12-316L

SS2SXLMP-- 18" Clamp Sweep Elbow, Polish ID/OD				
Tube OD (Size)	A	R	Weight	Part Number 316L SS
1/2"	18.50	18.00	1.28	SS2SXLMP-0.50-18-316L
1"	18.50	18.00	2.44	SS2SXLMP-1-18-316L
1.5"	18.50	18.00	3.56	SS2SXLMP-1.5-18-316L
2"	18.50	18.00	4.95	SS2SXLMP-2-18-316L
2.5"	18.50	18.00	6.12	SS2SXLMP-2.5-18-316L
3"	18.50	18.00	7.46	SS2SXLMP-3-18-316L
4"	18.63	18.00	12.64	SS2SXLMP-4-18-316L
5" & 6" Available-- 30°, 45°, 60° Can Be Quoted				

SS2SXLMP-- 24" Clamp Sweep Elbow, Polish ID/OD				
Tube OD (Size)	A	R	Weight	Part Number 316L SS
1/2"	24.50	24.00	1.48	SS2SXLMP-0.50-24-316L
1"	24.50	24.00	3.14	SS2SXLMP-1-24-316L
1.5"	24.50	24.00	4.66	SS2SXLMP-1.5-24-316L
2"	24.50	24.00	6.44	SS2SXLMP-2-24-316L
2.5"	24.50	24.00	7.12	SS2SXLMP-2.5-24-316L
3"	24.50	24.00	9.66	SS2SXLMP-3-24-316L
4"	24.63	24.00	16.14	SS2SXLMP-4-24-316L
5" & 6" Available-- 30°, 45°, 60° Can Be Quoted				

SS2SXLMP-- 36" Clamp Sweep Elbow, Polish ID/OD				
Tube OD (Size)	A	R	Weight	Part Number 316L SS
1/2"	36.50	36.00	2.13	SS2SXLMP-0.50-36-316L
1"	36.50	36.00	4.64	SS2SXLMP-1-36-316L
1.5"	36.50	36.00	6.96	SS2SXLMP-1.5-36-316L
2"	36.50	36.00	9.44	SS2SXLMP-2-36-316L
2.5"	36.50	36.00	11.82	SS2SXLMP-2.5-36-316L
3"	36.50	36.00	13.36	SS2SXLMP-3-36-316L
4"	36.63	36.00	24.34	SS2SXLMP-4-36-316L
5" & 6" Available-- 30°, 45°, 60° Can Be Quoted				

SANITARY SOLUTIONS INC.

Bulldog Fittings/Valves...Bulldog Tough.

Sanitary Solutions Polish ID/OD Weld Fittings

Sanitary Solutions Polish ID/OD Butt Weld Fittings are:

Polish ID/OD Weld Fittings Stocking Alloys: T304 or T316L

Polish ID/OD Butt Weld Fittings Sizes: ½" – 12" OD Tube

Note: OD Tube and Pipe Sizes do not interchange!

Butt Weld Fittings Sanitary Finish: 180 Grit Polish ID/OD

A3® 63-03

Sanitary Solutions Butt Weld Fittings Part Number Breakdown:

SS	Part Number	Size	Alloy
Sanitary Solutions	2S7 (Polish ID/OD)	2"	304 or 316L

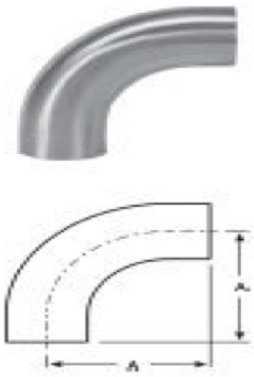

SS2S7--- 90° Buttweld Elbow *WITH Tangent*, Polish ID/OD

Tube OD (Size)	A	Nominal Wall	Weight	Part Number 304 SS	Part Number 316L SS	
1/2"	3.000	0.065	0.18		SS2S7-0.50-316L	
3/4"	3.000	0.065	0.31		SS2S7-0.75-316L	
1"	2.062	0.065	0.18	SS2S7-1-304	SS2S7-1-316L	
1.5"	2.937	0.065	0.44	SS2S7-1.5-304	SS2S7-1.5-316L	
2"	4.062	0.065	0.79	SS2S7-2-304	SS2S7-2-316L	
2.5"	5.187	0.065	1.29	SS2S7-2.5-304	SS2S7-2.5-316L	
3"	6.312	0.065	1.88	SS2S7-3-304	SS2S7-3-316L	
4"	8.312	0.083	4.25	SS2S7-4-304	SS2S7-4-316L	
6"	11.50	0.109	11.4	SS2S7-6-304	SS2S7-6-316L	*NEW!*

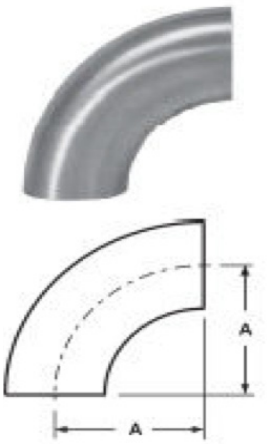

SS2WCL7--- 90° Buttweld Elbow (1.5 x CLR) or LESS Tangent, Polish ID/OD

Tube OD (Size)	A	Nominal Wall	Weight	Part Number 304 SS	Part Number 316L SS	
1/2"	1.125	0.065	0.03		SS2WCL7-0.50-316L	
3/4"	1.125	0.065	0.69		SS2WCL7-0.75-316L	
1"	1.500	0.065	0.13	SS2WCL7-1-304	SS2WCL7-1-316L	
1.5"	2.250	0.065	0.29	SS2WCL7-1.5-304	SS2WCL7-1.5-316L	
2"	3.000	0.065	0.52	SS2WCL7-2-304	SS2WCL7-2-316L	
2.5"	3.750	0.065	0.87	SS2WCL7-2.5-304	SS2WCL7-2.5-316L	
3"	4.500	0.065	1.53	SS2WCL7-3-304	SS2WCL7-3-316L	
4"	6.000	0.083	2.85	SS2WCL7-4-304	SS2WCL7-4-316L	
6"	9.000	0.109	8.53	SS2WCL7-6-304	SS2WCL7-6-316L	
8"	12.00	0.109	15.75	SS2WCL7-8-304	SS2WCL7-8-316L	
10"	15.00	0.120	23.5	SS2WCL7-10-304	SS2WCL7-10-316L	*NEW!*
12"	18.00	0.120	26.0	SS2WCL7-12-304	SS2WCL7-12-316L	*NEW!*

SS2CM7-- 90° Clamp x Weld Elbow, Polish ID/OD

Tube OD (Size)	A	B	Nominal Wall	Weight	Part Number 304 SS	Part Number 316L SS
1"	2.562	2.062	0.065	0.40	SS2CM7-1-304	SS2CM7-1-316L
1.5"	3.438	2.937	0.065	0.50	SS2CM7-1.5-304	SS2CM7-1.5-316L
2"	4.562	4.062	0.065	0.50	SS2CM7-2-304	SS2CM7-2-316L
2.5"	5.688	5.187	0.065	1.00	SS2CM7-2.5-304	SS2CM7-2.5-316L
3"	6.812	6.312	0.065	2.00	SS2CM7-3-304	SS2CM7-3-316L
4"	8.937	8.312	0.083	4.00	SS2CM7-4-304	SS2CM7-4-316L

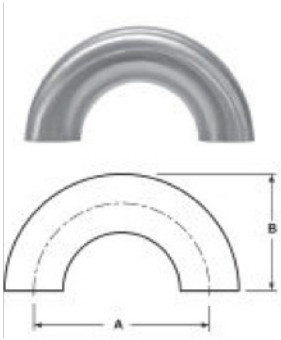

SS2WUL7-- 180° Buttweld Return Bend, Polish ID/OD

Tube OD (Size)	A	B	Nominal Wall	Weight	Part Number 304 SS	Part Number 316L SS
1"	3.000	2.000	0.065	0.27	SS2WUL7-1-304	SS2WUL7-1-316L
1.5"	4.500	3.000	0.065	0.71	SS2WUL7-1.5-304	SS2WUL7-1.5-316L
2"	6.000	4.000	0.065	1.25	SS2WUL7-2-304	SS2WUL7-2-316L
2.5"	7.500	5.000	0.065	1.79	SS2WUL7-2.5-304	SS2WUL7-2.5-316L
3"	9.000	6.000	0.065	2.63	SS2WUL7-3-304	SS2WUL7-3-316L
4"	12.00	8.000	0.083	5.59	SS2WUL7-4-304	SS2WUL7-4-316L

SS2SXL7-- 12" Buttweld 90° Sweep Elbows, Polish ID/OD

Tube OD (Size)	A	R	Weight	Part Number 316L SS
1"	12.00	12.00	1.50	SS2SXL7-1-12-316L
1.5"	12.00	12.00	2.20	SS2SXL7-1.5-12-316L
2"	12.00	12.00	3.00	SS2SXL7-2-12-316L
2.5"	12.00	12.00	3.75	SS2SXL7-2.5-12-316L
3"	12.00	12.00	4.50	SS2SXL7-3-12-316L
4"	12.00	12.00	7.70	SS2SXL7-4-12-316L

SS2SXL7-- 18" Buttweld 90° Sweep Elbows, Polish ID/OD

Tube OD (Size)	A	R	Weight	Part Number 316L SS
1.5"	18.00	18.00	3.30	SS2SXL7-1.5-18-316L
2"	18.00	18.00	4.50	SS2SXL7-2-18-316L
2.5"	18.00	18.00	5.60	SS2SXL7-2.5-18-316L
3"	18.00	18.00	6.80	SS2SXL7-3-18-316L
4"	18.00	18.00	11.5	SS2SXL7-4-18-316L
5" & 6" Available-- 30°, 45°, 60° Can Be Quoted				

SS2SXL7-- 24" Buttweld Sweep Elbows, Polish ID/OD				
Tube OD (Size)	A	R	Weight	Part Number 316L SS
1.5"	24.00	24.00	4.40	SS2SXL7-1.5-24-316L
2"	24.00	24.00	6.00	SS2SXL7-2-24-316L
2.5"	24.00	24.00	7.50	SS2SXL7-2.5-24-316L
3"	24.00	24.00	9.00	SS2SXL7-3-24-316L
4"	24.00	24.00	15.0	SS2SXL7-4-24-316L
5" & 6" Available-- 30°, 45°, 60° Can Be Quoted				

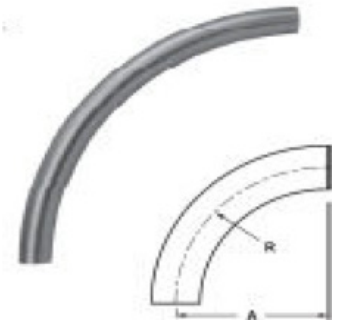

SS2SXL7-- 36" Buttweld Sweep Elbows, Polish ID/OD				
Tube OD (Size)	A	R	Weight	Part Number 316L SS
1.5"	36.00	36.00	6.70	SS2SXL7-1.5-36-316L
2"	36.00	36.00	9.00	SS2SXL7-2-36-316L
2.5"	36.00	36.00	11.3	SS2SXL7-2.5-36-316L
3"	36.00	36.00	13.7	SS2SXL7-3-36-316L
4"	36.00	36.00	23.2	SS2SXL7-4-36-316L
5" & 6" Available-- 30°, 45°, 60° Can Be Quoted				

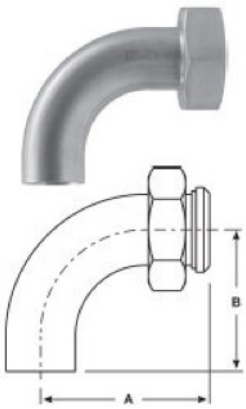

SS2FP7-- 90° 14PRF + 13H Hex Nut x Weld Elbow, Polish ID/OD						
Tube OD (Size)	A	B	Nominal Wall	Weight	Part Number 304 SS	Part Number 316L SS
1"	2.843	2.062	0.065	0.57	SS2FP7-1-304	SS2FP7-1-316L
1.5"	3.656	2.937	0.065	1.03	SS2FP7-1.5-304	SS2FP7-1.5-316L
2"	4.812	4.062	0.065	1.80	SS2FP7-2-304	SS2FP7-2-316L
2.5"	6.062	5.187	0.065	2.93	SS2FP7-2.5-304	SS2FP7-2.5-316L
3"	7.218	6.312	0.065	4.19	SS2FP7-3-304	SS2FP7-3-316L
4"	9.343	8.312	0.083	8.69	SS2FP7-4-304	SS2FP7-4-316L

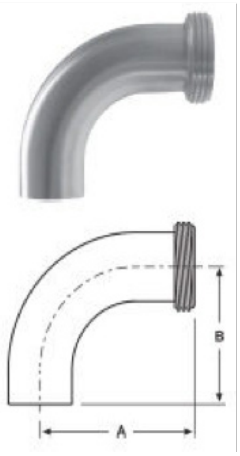

SS2T7---90° 15TRF (Threaded Bevel Seat) x Weld Elbow, Polish ID/OD						
Tube OD (Size)	A	B	Nominal Wall	Weight	Part Number 304 SS	Part Number 316L SS
1"	2.843	2.062	0.065	0.29	SS2T7-1-304	SS2T7-1-316L
1.5"	3.656	2.937	0.065	0.55	SS2T7-1.5-304	SS2T7-1.5-316L
2"	4.812	4.062	0.065	1.01	SS2T7-2-304	SS2T7-2-316L
2.5"	6.062	5.187	0.065	1.62	SS2T7-2.5-304	SS2T7-2.5-316L
3"	7.218	6.312	0.065	2.33	SS2T7-3-304	SS2T7-3-316L
4"	9.343	8.312	0.083	4.97	SS2T7-4-304	SS2T7-4-316L

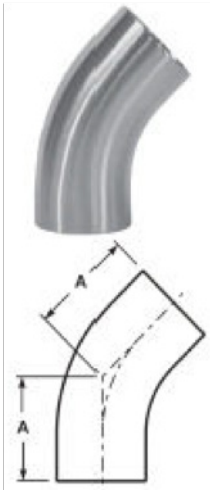

SS2KS7---- 45° Buttweld Elbow *WITH TANGENT*, Polish ID/OD

Tube OD (Size)	A	Nominal Wall	Weight	Part Number 304 SS A3	Part Number 316L SS A3	
1/2"	2.250	0.065	0.13		SS2KS7-0.50-316L	
3/4"	2.250	0.065	0.23		SS2KS7-0.75-316L	
1"	1.188	0.065	0.15	SS2KS7-1-304	SS2KS7-1-316L	
1.5"	1.625	0.065	0.30	SS2KS7-1.5-304	SS2KS7-1.5-316L	
2"	2.312	0.065	0.50	SS2KS7-2-304	SS2KS7-2-316L	
2.5"	3.000	0.065	0.88	SS2KS7-2.5-304	SS2KS7-2.5-316L	
3"	3.688	0.065	1.29	SS2KS7-3-304	SS2KS7-3-316L	
4"	4.812	0.083	2.53	SS2KS7-4-304	SS2KS7-4-316L	
6"	6.25	0.109	7.00	SS2KS7-6-304	SS2KS7-6-316L	*NEW!*

SS2WK7--- 45° Buttweld Elbow, less tangent, Polish ID/OD

Tube OD (Size)	A	R	Nominal Wall	Weight	Part Number 304 SS A3	Part Number 316L SS A3	
1/2"	0.518	1.125	0.065	0.01		SS2WK7-0.50-316L	
3/4"	0.466	1.125	0.065	0.03		SS2WK7-0.75-316L	
1"	0.625	1.500	0.065	0.08	SS2WK7-1-304	SS2WK7-1-316L	
1.5"	0.937	2.250	0.065	0.15	SS2WK7-1.5-304	SS2WK7-1.5-316L	
2"	1.250	3.000	0.065	0.26	SS2WK7-2-304	SS2WK7-2-316L	
2.5"	1.562	3.750	0.065	0.44	SS2WK7-2.5-304	SS2WK7-2.5-316L	
3"	1.875	4.500	0.065	0.77	SS2WK7-3-304	SS2WK7-3-316L	
4"	2.500	6.000	0.083	1.43	SS2WK7-4-304	SS2WK7-4-316L	
5"	3.125	7.250	0.109	2.10	SS2WK7-5-304	SSWK7-5-316L	
6"	3.750	9.000	0.109	4.26	SS2WK7-6-304	SS2WK7-6-316L	
8"	5.000	12.00	0.120	7.50	SS2WK7-8-304	SS2WK7-8-316L	
10"	6.250	15.00	0.120	11.5	SS2WK7-10-304	SS2WK7-10-316L	*NEW!*
12"	7.500	18.00	0.120	13.0	SS2WK7-12-304	SS2WK7-12-316L	*NEW!*

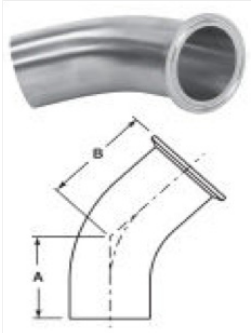

SS2KM7-- 45° Clamp x Weld Elbow, Polish ID/OD

Tube OD (Size)	A	B	Nominal Wall	Weight	Part Number 304 SS A3	Part Number 316L SS A3
1"	1.188	1.688	0.065	0.10	SS2KM7-1-304	SS2KM7-1-316L
1.5"	1.625	2.125	0.065	0.10	SS2KM7-1.5-304	SS2KM7-1.5-316L
2"	2.312	2.812	0.065	0.50	SS2KM7-2-304	SS2KM7-2-316L
2.5"	3.000	3.500	0.065	1.00	SS2KM7-2.5-304	SS2KM7-2.5-316L
3"	3.688	4.188	0.065	1.00	SS2KM7-3-304	SS2KM7-3-316L
4"	4.812	5.437	0.083	3.00	SS2KM7-4-304	SS2KM7-4-316L

Other Combinations of 45° buttweld elbows available

SS2KP

SS2KT

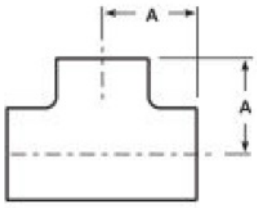

SS7WWW7--- *Short* Buttweld Tee, Polish ID/OD

Tube OD (Size)	A	Nominal Wall	Weight	Part Number 304 SS	Part Number 316L SS
1"	1.125	0.065	0.12	SS7WWW7-1-304	SS7WWW7-1-316L
1.5"	1.656	0.065	0.23	SS7WWW7-1.5-304	SS7WWW7-1.5-316L
2"	2.062	0.065	0.58	SS7WWW7-2-304	SS7WWW7-2-316L
2.5"	2.344	0.065	0.75	SS7WWW7-2.5-304	SS7WWW7-2.5-316L
3"	2.594	0.065	1.36	SS7WWW7-3-304	SS7WWW7-3-316L
4"	3.438	0.083	2.29	SS7WWW7-4-304	SS7WWW7-4-316L

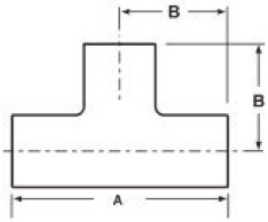

SS7W7--- *Long* Buttweld Tee, Polish ID/OD

Tube OD (Size)	A	B	Nominal Wall	Weight	Part Number 304 SS	Part Number 316L SS
1/2"	3.750	1.875	0.065	0.11		SS7W7-0.50-316L
3/4"	3.750	1.875	0.065	0.22		SS7W7-0.75-316L
1"	3.750	1.875	0.065	0.28	SS7W7-1-304	SS7W7-1-316L
1.5"	4.500	2.250	0.065	0.46	SS7W7-1.5-304	SS7W7-1.5-316L
2"	6.000	3.000	0.065	0.98	SS7W7-2-304	SS7W7-2-316L
2.5"	6.000	3.000	0.065	1.32	SS7W7-2.5-304	SS7W7-2.5-316L
3"	6.500	3.250	0.065	1.76	SS7W7-3-304	SS7W7-3-316L
4"	7.750	3.875	0.083	2.89	SS7W7-4-304	SS7W7-4-316L
5"	10.25	6.125	0.109	4.00	SS7W7-5-304	SS7W7-5-316L
6"	11.25	5.625	0.109	8.00	SS7W7-6-304	SS7W7-6-316L
8"	14.00	7.000	0.109	12.5	SS7W7-8-304	SS7W7-8-316L
10"	17.00	8.500	0.120	18.5	SS7W7-10-304	SS7W7-10-316L *NEW!*
12"	20.00	10.00	0.120	19.0	SS7W7-12-304	SS7W7-12-316L *NEW!*

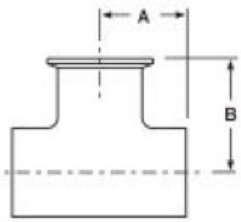

SS7WWC7-- TEE--Buttweld on each Run x Clamp on Branch, Polish ID/OD

Tube OD (Size)	A	B	Nominal Wall	Weight	Part Number 304 SS	Part Number 316L SS
1"	1.125	1.625	0.065	0.24	SS7WWC7-1-304	SS7WWC7-1-316L
1.5"	1.656	2.156	0.065	0.32	SS7WWC7-1.5-304	SS7WWC7-1.5-316L
2"	2.062	2.562	0.065	0.70	SS7WWC7-2-304	SS7WWC7-2-316L
2.5"	2.344	2.844	0.065	0.90	SS7WWC7-2.5-304	SS7WWC7-2.5-316L
3"	2.594	3.094	0.065	1.54	SS7WWC7-3-304	SS7WWC7-3-316L
4"	3.438	4.063	0.083	2.67	SS7WWC7-4-304	SS7WWC7-4-316L

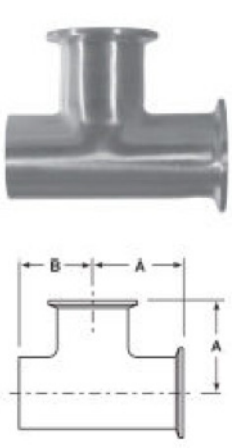

SS7WCC-- TEE--Buttweld on 1 run x Clamp on 1 Run x Clamp on Branch, Polish ID/OD						
Tube OD (Size)	A	B	Nominal Wall	Weight	Part Number 304 SS	Part Number 316L SS
1"	1.625	1.125	0.065	0.36	SS7WCC7-1-304	SS7WCC7-1-316L
1.5"	2.156	1.656	0.065	0.42	SS7WCC7-1.5-304	SS7WCC7-1.5-316L
2"	2.562	2.062	0.065	0.82	SS7WCC7-2-304	SS7WCC7-2-316L
2.5"	2.844	2.344	0.065	1.05	SS7WCC7-2.5-304	SS7WCC7-2.5-316L
3"	3.094	2.594	0.065	1.72	SS7WCC7-3-304	SS7WCC7-3-316L
4"	3.938	3.438	0.083	3.05	SS7WCC7-4-304	SS7WCC7-4-316L

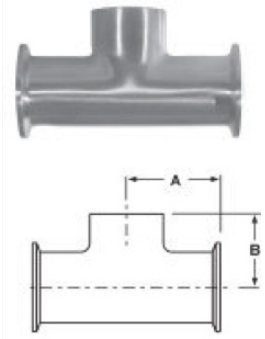

SS7CCW7-- TEE--Clamp on each run x Buttweld on Branch, Polish ID/OD							
Tube OD (Size)	A	B	C	Nominal Wall	Weight	Part Number 304 SS	Part Number 316L SS
1"	1.625	1.125	3.250	0.065	0.36	SS7CCW7-1-304	SS7CCW7-1-316L
1.5"	2.156	1.656	4.312	0.065	0.42	SS7CCW7-1.5-304	SS7CCW7-1.5-316L
2"	2.562	2.062	5.124	0.065	0.82	SS7CCW7-2-304	SS7CCW7-2-316L
2.5"	2.844	2.344	5.688	0.065	1.05	SS7CCW7-2.5-304	SS7CCW7-2.5-316L
3"	3.094	2.594	6.188	0.065	1.72	SS7CCW7-3-304	SS7CCW7-3-316L
4"	3.938	3.438	8.124	0.083	3.05	SS7CCW7-4-304	SS7CCW7-4-316L

Other Combinations of Weld Tees Available

SS7TTW

SS7WTT

SS7WTW

SS7WWT

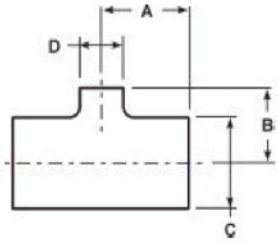

SS7RWWW7: Buttweld Reducing Tee, Polish ID/OD

Tube OD (Size)	A	B	C	D	Weight	Part Number 304 SS	Part Number 316L SS	
3/4" x 1/2"	2.000	2.000	0.750	0.500	0.11		SS7RWWW7-0.75 x 0.50-316L	
1" x 1/2"	2.125	2.125	1.000	0.500	0.11		SS7RWWW7-1 x 0.50- 316L	
1" x 3/4"	2.125	2.125	1.000	0.750	0.19		SS7RWWW7-1 x 0.75- 316L	
1.5" x 1/2"	2.375	2.375	1.500	0.500	0.21		SS7RWWW7-1.5 x 0.50- 316L	
1.5" x 3/4"	2.375	2.375	1.500	0.750	0.26		SS7RWWW7-1.5 x 0.75- 316L	
1.5" x 1"	1.656	1.375	1.500	1.000	0.31	SS7RWWW7-1.5 x 1- 304	SS7RWWW7-1.5 x 1- 316L	
2" x 1/2"	2.875	2.625	2.000	0.500	0.72	SS7RWWW7-2" x 1/2"- 304	SS7RWWW7-2" x 1/2"- 316L	*NEW!*
2" x 3/4"	2.875	2.625	2.000	0.750	0.72	SS7RWWW7-2" x 3/4"- 304	SS7RWWW7-2" x 3/4"- 316L	*NEW!*
2" x 1"	2.062	1.625	2.000	1.000	0.35	SS7RWWW7-2 x 1- 304	SS7RWWW7-2 x 1- 316L	
2" x 1.5"	2.062	1.906	2.000	1.500	0.75	SS7RWWW7-2 x 1.5- 304	SS7RWWW7-2 x 1.5- 316L	
2.5" x 1"	2.344	2.156	2.500	1.000	0.78	SS7RWWW7-2.5" x 1"- 304	SS7RWWW7-2.5" x 1"- 316L	
2.5" x 1.5"	2.344	2.156	2.500	1.500	0.76	SS7RWWW7-2.5 x 1.5- 304	SS7RWWW7-2.5 x 1.5- 316L	
2.5" x 2"	2.344	2.312	2.500	2.000	0.80	SS7RWWW7-2.5 x 2- 304	SS7RWWW7-2.5 x 2- 316L	
3" x 1"	2.594	2.406	3.000	1.000	0.82	SS7RWWW7-3 x 1-304	SS7RWWW7-3 x 1- 316L	
3" x 1.5"	2.594	2.406	3.000	1.500	1.01	SS7RWWW7-3 x 1.5- 304	SS7RWWW7-3 x 1.5- 316L	
3" x 2"	2.594	2.562	3.000	2.000	1.01	SS7RWWW7-3 x 2- 304	SS7RWWW7-3 x 2- 316L	
3" x 2.5"	2.594	2.594	3.000	2.500	1.03	SS7RWWW7-3 x 2.5- 304	SS7RWWW7-3 x 2.5- 316L	
4" x 1.0"	3.438	2.906	4.000	1.000	1.08	SS7RWWW7-4 x 1- 304	SS7RWWW7-4 x 1- 316L	*NEW!*
4" x 1.5"	3.438	2.906	4.000	1.500	2.14	SS7RWWW7-4 x 1.5- 304	SS7RWWW7-4 x 1.5- 316L	*NEW!*
4" x 2"	3.438	3.062	4.000	2.000	2.14	SS7RWWW7-4 x 2- 304	SS7RWWW7-4 x 2- 316L	
4" x 2.5"	3.438	3.093	4.000	2.500	2.25	SS7RWWW7-4 x 2.5- 304	SS7RWWW7-4 x 2.5- 316L	
4" x 3"	3.438	3.093	4.000	3.000	2.35	SS7RWWW7-4 x 3- 304	SS7RWWW7-4 x 3- 316L	
6" x 2"	5.625	4.500	6.000	2.000	2.45	SS7RWWW7-6 x 2- 304	SS7RWWW7-6 x 2- 316L	
6" x 2.5"	5.625	4.770	6.000	2.500	6.60	SS7RWWW7-6 x 2.5 - 304	SS7RWWW7-6 x 2.5-316L	
6" x 3"	5.625	4.875	6.000	3.000	5.75	SS7RWWW7-6 x 3- 304	SS7RWWW7-6 x 3- 316L	
6" x 4"	5.625	5.125	6.000	4.000	5.75	SS7RWWW7-6 x 4- 304	SS7RWWW7-6 x 4- 316L	*NEW!*
8" x 4"	7.000	6.125	8.000	4.000	11.5	SS7RWWW7-8 x 4- 304	SS7RWWW7-8 x 4- 316L	*NEW!*
8" x 6"	7.000	6.625	8.000	6.000	12.5	SS7RWWW7-8 x 6- 304	SS7RWWW7-8 x 6- 316L	

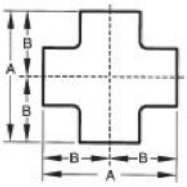

SS9WWWW7--- Buttweld Cross, Polish ID/OD

Tube OD (Size)	A	B	Nominal Wall	Weight	Part Number 304 SS	Part Number 316L SS
1"	4.250	2.125	0.065	0.40	SS9WWWW7-1-304	SS9WWWW7-1-316L
1.5"	4.750	2.385	0.065	0.50	SS9WWWW7-1.5-304	SS9WWWW7-1.5-316L
2"	5.750	2.785	0.065	1.00	SS9WWWW7-2-304	SS9WWWW7-2-316L
2.5"	6.250	3.125	0.065	1.50	SS9WWWW7-2.5-304	SS9WWWW7-2.5-316L
3"	6.750	3.375	0.065	1.50	SS9WWWW7-3-304	SS9WWWW7-3-316L
4"	8.250	4.125	0.083	3.00	SS9WWWW7-4-304	SS9WWWW7-4-316L

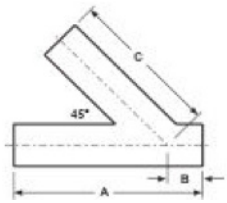

SS28L7-- Buttweld *Lateral "Y"*, Polish ID/OD

Tube OD (Size)	A	B	C	Weight	Nominal Wall	Part Number 304 SS	Part Number 316L SS
1"	6.000	1.000	5.000	0.62	0.065	SS28L7-1-304	SS28L7-1-316L
1.5"	7.375	1.188	6.188	1.35	0.065	SS28L7-1.5-304	SS28L7-1.5-316L
2"	8.750	1.625	7.125	1.56	0.065	SS28L7-2-304	SS28L7-2-316L
2.5"	10.00	1.500	8.500	2.02	0.065	SS28L7-2.5-304	SS28L7-2.5-316L
3"	10.75	1.875	8.875	3.00	0.065	SS28L7-3-304	SS28L7-3-316L
4"	12.81	1.812	10.75	5.42	0.083	SS28L7-4-304	SS28L7-4-316L
6"	16.50	4.000	14.75	14.5	0.109	SS28L7-6-304	SS28L7-6-316L

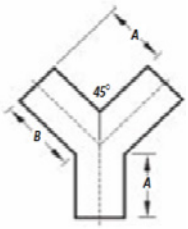

SS28Y7--- Buttweld *True "Y"*, Polish ID/OD

Tube OD (Size)	A	B	Nominal Wall	Weight	Part Number 304 SS	Part Number 316L SS
1"	2.000	2.438	0.065	0.55	SS28Y7-1-304	SS28Y7-1-316L
1.5"	2.000	2.438	0.065	0.95	SS28Y7-1.5-304	SS28Y7-1.5-316L
2"	2.625	3.250	0.065	1.26	SS28Y7-2-304	SS28Y7-2-316L
2.5"	3.375	4.125	0.065	1.95	SS28Y7-2.5-304	SS28Y7-2.5-316L
3"	4.000	4.875	0.065	2.63	SS28Y7-3-304	SS28Y7-3-316L
4"	5.375	6.562	0.083	4.58	SS28Y7-4-304	SS28Y7-4-316L
6"	7.813	8.625	0.109	13.5	SS28Y7-6-304	SS28Y7-316L

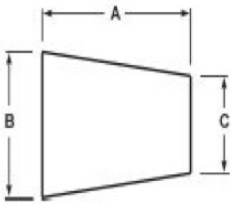

SS31W7-- Buttweld Concentric Reducer, Polish ID/OD

Tube OD (Size)	A	B	C	Weight	Nominal Wall	Part Number 304 SS 3A	Part Number 316L SS 3A
3/4" x 1/2"	1.000	0.750	0.500	0.06	0.065		SS31W7- .75 x .50- 316L
1" x 1/2"	1.000	1.000	0.500	0.08	0.065		SS31W7- 1 x .50- 316L
1" x 3/4"	1.000	1.000	0.750	0.07	0.065		SS31W7- 1 x .75- 316L
1.5" x 1/2"	2.000	1.500	0.500	0.21	0.065		SS31W7- 1.5 x .50- 316L
1.5" x 3/4"	2.000	1.500	0.750	0.20	0.065		SS31W7- 1.5 x .75- 316L
1.5" x 1"	2.000	1.500	1.000	0.12	0.065	SS31W7- 1.5 x 1- 304	SS31W7- 1.5 x 1- 316L
2" x 1/2"	6.000	2.000	0.500	0.08	0.065		SS31W7- 2 x 0.50- 316L *NEW!*
2" x 3/4"	5.000	2.000	0.750	0.07	0.065		SS31W7- 2 x 0.75- 316L *NEW!*
2" x 1"	4.000	2.000	1.000	0.34	0.065	SS31W7- 2 x 1- 304	SS31W7- 2 x 1- 316L
2" x 1.5"	2.000	2.000	1.500	0.18	0.065	SS31W7- 2 x 1.5- 304	SS31W7- 2 x 1.5- 316L
2.5" X 1"	4.000	2.500	1.000	0.36	0.065	SS31W7- 2.5 x 1- 304	SS31W7- 2.5 x 1- 316L
2.5" x 1.5"	4.000	2.500	1.500	0.43	0.065	SS31W7- 2.5 x 1.5- 304	SS31W7- 2.5 x 1.5- 316L
2.5" x 2"	2.000	2.500	2.000	0.25	0.065	SS31W7- 2.5 x 2- 304	SS31W7- 2.5 x 2- 316L
3" x 1"	8.000	3.000	1.000	0.88	0.065	SS31W7- 3 x 1- 304	SS31W7- 3 x 1- 316L
3" x 1.5"	6.000	3.000	1.500	0.93	0.065	SS31W7- 3 x 1.5- 304	SS31W7- 3 x 1.5- 316L
3" x 2"	4.000	3.000	2.000	0.56	0.065	SS31W7- 3 x 2- 304	SS31W7- 3 x 2- 316L
3" x 2.5"	2.000	3.000	2.500	0.30	0.065	SS31W7- 3 x 2.5- 304	SS31W7- 3 x 2.5- 316L
4" x 1"	12.000	4.000	1.000	1.10	0.083	SS31W7- 4 x 1- 304	SS31W7- 4 x 1- 316L *NEW!*
4" x 1.5"	10.00	4.000	1.500	1.30	0.083	SS31W7- 4 x 1.5- 304	SS31W7- 4 x 1.5- 316L
4" x 2"	8.000	4.000	2.000	1.66	0.083	SS31W7- 4 x 2- 304	SS31W7- 4 x 2- 316L
4" x 2.5"	6.000	4.000	2.500	1.50	0.083	SS31W7- 4 x 2.5- 304	SS31W7- 4 x 2.5- 316L
4" x 3"	4.000	4.000	3.000	1.15	0.083	SS31W7- 4 x 3- 304	SS31W7- 4 x 3- 316L
6" x 2"	5.500	6.000	2.000	2.60	0.109	SS31W7- 6 x 2- 304	SS31W7- 6 x 2- 316L
6" x 2.5"	5.500	6.000	2.500	2.60	0.109	SS31W7- 6 x 2.5- 304	SS31W7- 6 x 2.5- 316L *NEW!*
6" x 3"	5.500	6.000	3.000	2.60	0.109	SS31W7- 6 x 3- 304	SS31W7- 6 x 3- 316L
6" x 4"	5.500	6.000	4.000	1.92	0.109	SS31W7- 6 x 4- 304	SS31W7- 6 x 4- 316L
8" x 4"	6.000	8.000	4.000	3.50	0.109	SS31W7- 8 x 4- 304	SS31W7- 8 x 4- 316L
8" x 6"	6.000	8.000	6.000	3.00	0.109	SS31W7- 8 x 6- 304	SS31W7- 8 x 6- 316L
10" x 6"	7.000	10.00	6.000	4.70	0.120	SS31W7- 10 x 6- 304	SS31W7- 10 x 6- 316L *NEW!*
10" x 8"	7.000	10.00	8.000	5.00	0.120	SS31W7- 10 x 8- 304	SS31W7- 10 x 8- 316L *NEW!*
12" x 6"	8.000	12.00	8.000	17.6	0.120	SS31W7- 12 x 6- 304	SS31W7- 12 x 6- 316L *NEW!*
12" x 8"	8.000	12.00	10.00	18.4	0.120	SS31W7- 12 x 8- 304	SS31W7- 12 x 8- 316L *NEW!*

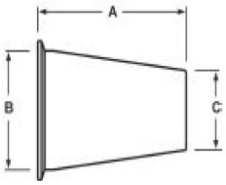

SS31CW7--Clamp (Large End) x Weld Concentric Reducer, Polish ID/OD

Tube OD (Size)	A	B	C	Weight	Nominal Wall	Part Number 304 SS 3A	Part Number 316L SS 3A
3/4" x 1/2"	1.500	0.750	0.500	0.065	0.065		SS31CW7- .75 x .50- 316L
1" x 1/2"	1.500	1.000	0.500	0.20	0.065		SS31CW7- 1 x .50- 316L
1" x 3/4"	1.500	1.000	0.750	0.19	0.065		SS31CW7- 1 x .75- 316L
1.5" x 1/2"	2.500	1.500	0.500	0.30	0.065		SS31CW7- 1.5 x .50- 316L
1.5" x 3/4"	2.500	1.500	0.750	0.29	0.065		SS31CW7- 1.5 x .75- 316L
1.5" x 1"	2.500	1.500	1.000	0.21	0.065	SS31CW7- 1.5 x 1- 304	SS31CW7- 1.5 x 1- 316L
2" x 1"	4.500	2.000	1.000	0.46	0.065	SS31CW7- 2 x 1- 304	SS31CW7- 2 x 1- 316L
2" x 1.5"	2.500	2.000	1.500	0.40	0.065	SS31CW7- 2 x 1.5- 304	SS31CW7- 2 x 1.5- 316L
2.5" x 1.5"	4.500	2.500	1.500	0.58	0.065	SS31CW7- 2.5 x 1.5- 304	SS31CW7- 2.5 x 1.5- 316L
2.5" x 2"	2.500	2.500	2.000	0.40	0.065	SS31CW7- 2.5 x 2- 304	SS31CW7- 2.5 x 2- 316L
3" x 1.5"	6.500	3.000	1.500	1.11	0.065	SS31CW7- 3 x 1.5- 304	SS31CW7- 3 x 1.5- 316L
3" x 2"	4.500	3.000	2.000	0.74	0.065	SS31CW7- 3 x 2- 304	SS31CW7- 3 x 2- 316L
3" x 2.5"	2.500	3.000	2.500	0.48	0.065	SS31CW7- 3 x 2.5- 304	SS31CW7- 3 x 2.5- 316L
4" x 1.5"	10.625	4.000	1.500	1.68	0.083	SS31CW7- 4 x 1.5- 304	SS31CW7- 4 x 1.5- 316L
4" x 2"	8.625	4.000	2.000	2.04	0.083	SS31CW7- 4 x 2- 304	SS31CW7- 4 x 2- 316L
4" x 2.5"	6.625	4.000	2.500	1.88	0.083	SS31CW7- 4 x 2.5- 304	SS31CW7- 4 x 2.5- 316L
4" x 3"	4.625	4.000	3.000	1.53	0.083	SS31CW7- 4 x 3- 304	SS31CW7- 4 x 3- 316L
6" x 2"	6.375	6.000	2.000	3.02	0.109	SS31CW7- 6 x 2- 304	SS31CW7- 6 x 2- 316L
6" x 3"	6.375	6.000	3.000	3.02	0.109	SS31CW7- 6 x 3- 304	SS31CW7- 6 x 3- 316L
6" x 4"	6.375	6.000	4.000	3.87	0.109	SS31CW7- 6 x 4- 304	SS31CW7- 6 x 4- 316L

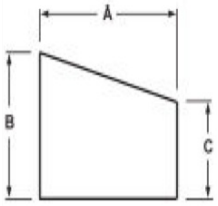

SS32W7-- Buttweld Eccentric Reducer, Polish ID/OD

Tube OD (Size)	A	B	C	Weight	Nominal Wall	Part Number 304 SS 3A	Part Number 316L SS 3A
3/4" x 1/2"	1.000	0.750	0.500	0.06	0.065		SS32W7-.75 x .50-316L
1" x 1/2"	1.000	1.000	0.500	0.08	0.065		SS32W7-1 x .50-316L
1" x 3/4"	1.000	1.000	0.750	0.07	0.065		SS32W7-1 x .75-316L
1.5" x 1/2"	2.000	1.500	0.500	0.21	0.065		SS32W7-1.5 x .50-316L
1.5" x 3/4"	2.000	1.500	0.750	0.20	0.065		SS32W7-1.5 x .75-316L
1.5" x 1"	2.000	1.500	1.000	0.12	0.065	SS32W7-1.5 x 1-304	SS32W7-1.5 x 1-316L
2" x 1/2"	6.000	2.000	5.000	0.34	0.065	SS32W7-2 x 1/2 - 304	SS32W7-2 x 1/2 - 316L
2" x 3/4"	5.000	2.000	0.750	0.18	0.065	SS32W7-2 x 3/4 - 304	SS32W7-2 x 3/4 - 316L
2" x 1"	4.000	2.000	1.000	0.34	0.065	SS32W7-2 x 1-304	SS32W7-2 x 1-316L
2" x 1.5"	2.000	2.000	1.500	0.18	0.065	SS32W7-2 x 1.5-304	SS32W7-2 x 1.5-316L
2.5" x 1"	4.000	2.500	1.000	0.42	0.065	SS32W7-2.5 x 1-304	SS32W7-2.5 x 1-316L
2.5" x 1.5"	4.000	2.500	1.500	0.43	0.065	SS32W7-2.5 x 1.5-304	SS32W7-2.5 x 1.5-316L
2.5" x 2"	2.00	2.500	2.000	0.25	0.065	SS32W7-2.5 x 2-304	SS32W7-2.5 x 2-316L
3" x 1"	6.000	3.000	1.000	0.88	0.065	SS32W7-3 x 1 - 304	SS32W7-3 x 1 - 316L *NEW!*
3" x 1.5"	6.000	3.000	1.500	0.93	0.065	SS32W7-3 x 1.5-304	SS32W7-3 x 1.5-316L
3" x 2"	4.000	3.000	2.000	0.56	0.065	SS32W7-3 x 2-304	SS32W7-3 x 2-316L
3" x 2.5"	2.000	3.000	2.500	0.30	0.065	SS32W7-3 x 2.5-304	SS32W7-3 x 2.5-316L
4" x 1"	10.00	4.000	1.000	1.59	0.083	SS32W7-4 x 1-304	SS32W7-4 x 1-316L *NEW!*
4" x 1.5"	10.00	4.000	1.500	1.59	0.083	SS32W7-4 x 1.5-304	SS32W7-4 x 1.5-316L
4" x 2"	8.000	4.000	2.000	1.66	0.083	SS32W7-4 x 2-304	SS32W7-4 x 2-316L
4" x 2.5"	6.000	4.000	2.500	1.50	0.083	SS32W7-4 x 2.5-304	SS32W7-4 x 2.5-316L
4" x 3"	4.000	4.000	3.000	1.15	0.083	SS32W7-4 x 3-304	SS32W7-4 x 3-316L
6" x 2"	5.500	6.000	2.000	2.60	0.109	SS32W7-6 x 2-304	SS32W7-6 x 2-316L
6" x 2.5"	5.500	6.000	2.500	2.60	0.109	SS32W7-6 x 2.5-304	SS32W7-6 X 2.5-316L
6" x 3"	5.500	6.000	3.000	2.60	0.109	SS32W7-6 x 3-304	SS32W7-6 x 3-316L
6" x 4"	5.500	6.000	4.000	1.92	0.109	SS32W7-6 x 4-304	SS32W7-6 x 4-316L
8" x 4"	6.000	8.000	4.000	3.90	0.109	SS32W7-8 x 4-304	SS32W7-8 x 4-316L *NEW!*
8" x 6"	7.000	8.000	6.000	4.80	0.109	SS32W7-8 x 6-304	SS32W7-8 x 6-316L *NEW!*
10" x 6"	7.000	10.00	6.000	CALL	0.120	SS32W7-10 x 6 - 304	SS32W7-10 x 6-316L
10" x 8"	8.000	10.00	8.000	CALL	0.120	SS32W7-10 x 8 - 304	SS32W7-10 x 8-316L
12" x 6"	8.000	12.00	6.000	CALL	0.120	SS32W7-12 x 6-304	SS32W7-12 x 6-316L
12" x 8"	8.000	12.00	8.000	CALL	0.120	SS32W7-12 x 8-304	SS32W7-12 x 8-316L

Other Combinations of Weld Reducers Available

SS31P

SS32P

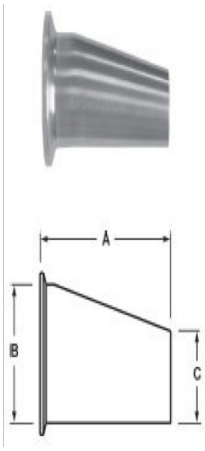

SS32CW7--Clamp (Large End) x Weld Eccentric Reducer, Polish ID/OD

Tube OD (Size)	A	B	C	Weight	Nominal Wall	Part Number 304 SS	Part Number 316L SS
3/4" x 1/2"	1.500	0.750	0.500	0.06	0.065		SS32CW7- .75 x .50- 316L
1" x 1/2"	1.500	1.000	0.500	0.20	0.065		SS32CW7- 1 x .50- 316L
1" x 3/4"	1.500	1.000	0.750	0.19	0.065		SS32CW7- 1 x .75- 316L
1.5" x 1/2"	2.500	1.500	0.500	0.30	0.065		SS32CW7- 1.5 x .50- 316L
1.5" x 3/4"	2.500	1.500	0.750	0.29	0.065		SS32CW7- 1.5 x .75- 316L
1.5" x 1"	2.500	1.500	1.000	0.21	0.065	SS32CW7- 1.5 x 1- 304	SS32CW7- 1.5 x 1- 316L
2" x 1"	4.500	2.000	1.000	0.46	0.065	SS32CW7- 2 x 1- 304	SS32CW7- 2 x 1- 316L
2" x 1.5"	2.500	2.000	1.500	0.40	0.065	SS32CW7- 2 x 1.5- 304	SS32CW7- 2 x 1.5- 316L
2.5" x 1.5"	4.500	2.500	1.500	0.58	0.065	SS32CW7- 2.5 x 1.5- 304	SS32CW7- 2.5 x 1.5- 316L
2.5" x 2"	2.500	2.500	2.000	0.40	0.065	SS32CW7- 2.5 x 2- 304	SS32CW7- 2.5 x 2- 316L
3" x 1.5"	6.500	3.000	1.500	1.11	0.065	SS32CW7- 3 x 1.5- 304	SS32CW7- 3 x 1.5- 316L
3" x 2"	4.500	3.000	2.000	0.74	0.065	SS32CW7- 3 x 2- 304	SS32CW7- 3 x 2- 316L
3" x 2.5"	2.500	3.000	2.500	0.48	0.065	SS32CW7- 3 x 2.5- 304	SS32CW7- 3 x 2.5- 316L
4" x 1.5"	10.625	4.000	1.500	1.68	0.083	SS32CW7- 4 x 1.5- 304	SS32CW7- 4 x 1.5- 316L
4" x 2"	8.625	4.000	2.000	2.04	0.083	SS32CW7- 4 x 2- 304	SS32CW7- 4 x 2- 316L
4" x 2.5"	6.625	4.000	2.500	1.88	0.083	SS32CW7- 4 x 2.5- 304	SS32CW7- 4 x 2.5- 316L
4" x 3"	4.625	4.000	3.000	1.53	0.083	SS32CW7- 4 x 3- 304	SS32CW7- 4 x 3- 316L
6" x 2"	6.375	6.000	2.000	3.02	0.109	SS32CW7- 6 x 2- 304	SS32CW7- 6 x 2- 316L
6" x 3"	6.375	6.000	3.000	3.02	0.109	SS32CW7- 6 x 3- 304	SS32CW7- 6 x 3- 316L
6" x 4"	6.375	6.000	4.000	3.87	0.109	SS32CW7- 6 x 4- 304	SS32CW7- 6 x 4- 316L

PT7 - POLISHED ID/OD TUBING

Tube OD (Size)	Length	Quantity	Weight	Nominal Wall	Part Number 304 SS	Part Number 316L SS
1/2"	20'	300'	7.00	0.065		PT7-0.50-316L
3/4"	20'	300'	10.0	0.065		PT7-0.75-316L
1"	20'	300'	14.0	0.065	PT7-1-304	PT7-1-316L
1.5"	20'	300'	20.0	0.065	PT7-1.5-304	PT7-1.5-316L
2"	20'	300'	27.0	0.065	PT7-2-304	PT7-2-316L
2.5"	20'	300'	34.0	0.065	PT7-2.5-304	PT7-2.5-316L
3"	20'	300'	41.0	0.065	PT7-3-304	PT7-3-316L
4"	20'	300'	70.0	0.083	PT7-4-304	PT7-4-316L
6"	20'	100'	140	0.109	PT7-6-304	PT7-6-316L
8"	20'	20'	220	0.109	PT7-8-304	PT7-8-316L
10"	20'	20'	275	0.120	PT7-10-304	PT7-10-316L
12"	20'	20'	320	0.120	PT7-12-304	PT7-12-316L

Tubing Surcharges change regulary
Call for Full Freight Allowance

SANITARY SOLUTIONS INC.

Bulldog Fittings/Valves...Bulldog Tough.

Sanitary Solutions Bevel Seat Fittings

Sanitary Solutions Bevel Seat Various Fittings are:

Bevel Seat Fittings Stocking Alloys: T304 or T316L

Bevel Seat Fittings Sizes: 1”—4” OD Tube

Note: OD Tube and Pipe Sizes do not interchange!

Bevel Seat Sanitary Finish: 180 Grit Polish

A3® 63-03

Sanitary Solutions Clamp Fittings Part Number Breakdown:

SS	Part Number	Size	Alloy
Sanitary Solutions	14PRF	2”	304 or 316L

SS2C7: 90° Elbow-- Threaded Bevel Seat Ferrule x Threaded Bevel Seat Ferrule				
Tube OD (Size)	A	Weight	Part Number 304	Part Number 316L
1"	2.218	0.53	SS2C7-1-304	SS2C7-1-316L
1.5"	2.968	0.64	SS2C7-1.5-304	SS2C7-1.5-316L
2"	3.750	1.64	SS2C7-2-304	SS2C7-2-316L
2.5"	4.625	2.34	SS2C7-2.5-304	SS2C7-2.5-316L
3"	5.406	3.86	SS2C7-3-304	SS2C7-3-316L
4"	7.031	6.70	SS2C7-4-304	SS2C7-4-316L

SS2E7: 90° Elbow-- Plain Bevel Seat Ferrule & Hex Nut (T304) on Each End				
Tube OD (Size)	A	Weight	Part Number 304	Part Number 316L
1"	2.218	0.81	SS2E7-1-304	SS2E7-1-316L
1.5"	2.968	1.12	SS2E7-1.5-304	SS2E7-1.5-316L
2"	3.750	2.43	SS2E7-2-304	SS2E7-2-316L
2.5"	4.625	3.65	SS2E7-2.5-304	SS2E7-2.5-316L
3"	5.406	5.72	SS2E7-3-304	SS2E7-3-316L
4"	7.031	10.72	SS2E7-4-304	SS2E7-4-316L

SS2F7: 90° Elbow-- Threaded Bevel Seat Ferrule x Plain Bevel Seat & Hex Nut (T304)				
Tube OD (Size)	A	Weight	Part Number 304	Part Number 316L
1"	2.218	1.09	SS2F7-1-304	SS2F7-1-316L
1.5"	2.968	1.60	SS2F7-1.5-304	SS2F7-1.5-316L
2"	3.750	3.22	SS2F7-2-304	SS2F7-2-316L
2.5"	4.625	4.96	SS2F7-2.5-304	SS2F7-2.5-316L
3"	5.406	7.58	SS2F7-3-304	SS2F7-3-316L
4"	7.031	14.14	SS2F7-4-304	SS2F7-4-316L

SS13H: Union Hex Nut, Machine Finish				
Tube OD (Size)	A	B	Weight	Part Number 304
1"	0.906	1.812	0.28	SS13H-1-304
1.5"	0.968	2.406	0.48	SS13H-1.5-304
2"	1.062	3.000	0.79	SS13H-2-304
2.5"	1.187	3.594	1.31	SS13H-2.5-304
3"	1.281	4.188	1.86	SS13H-3-304
4"	1.500	5.438	3.72	SS13H-4-304

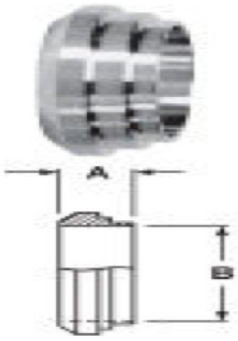

SS14PRF: *SHORT Plain* Bevel Seat Ferrule					
Tube OD (Size)	A	B	Weight	Part Number 304	Part Number 316L
1"	0.718	0.870	0.11	SS14PRF-1-304	SS14PRF-1-316L
1.5"	0.718	1.370	0.11	SS14PRF-1.5-304	SS14PRF-1.5-316L
2"	0.750	1.870	0.22	SS14PRF-2-304	SS14PRF-2-316L
2.5"	0.875	2.370	0.33	SS14PRF-2.5-304	SS14PRF-2.5-316L
3"	0.906	2.870	0.45	SS14PRF-3-304	SS14PRF-3-316L
4"	1.031	3.834	0.72	SS14PRF-4-304	SS14PRF-4-316L

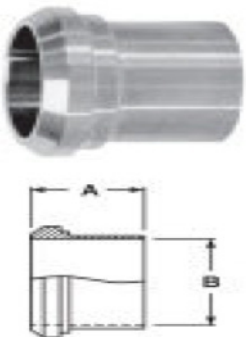

SS14A: LONG *Plain* Bevel Seat Ferrule					
Tube OD (Size)	A	B	Weight	Part Number 304	Part Number 316L
1"	1.375	0.870	0.08	SS14A-1-304	SS14A-1-316L
1.5"	1.500	1.370	0.27	SS14A-1.5-304	SS14A-1.5-316L
2"	1.500	1.870	0.39	SS14A-2-304	SS14A-2-316L
2.5"	1.750	2.370	0.59	SS14A-2.5-304	SS14A-2.5-316L
3"	1.750	2.870	0.73	SS14A-3-304	SS14A-3-316L
4"	1.750	3.834	0.85	SS14A-4-304	SS14A-4-316L

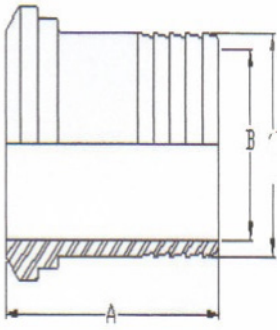

SS14AHR: Plain Bevel Seat *Rubber Hose Barb* Adapter					
Tube OD (Size)	A	B	C	Part Number 304	Part Number 316L
1"	1.687	0.870	1.000	SS14AHR-1-304	SS14AHR-1-316L
1.5"	1.687	1.370	1.500	SS14AHR-1.5-304	SS14AHR-1.5-316L
2"	2.312	1.870	2.000	SS14AHR-2-304	SS14AHR-2-316L
2.5"	2.343	2.370	2.500	SS14AHR-2.5-304	SS14AHR-2.5-316L
3"	3.500	2.870	3.000	SS14AHR-3-304	SS14AHR-3-316L
4"	4.000	3.834	4.000	SS14AHR-4-304	SS14AHR-4-316L

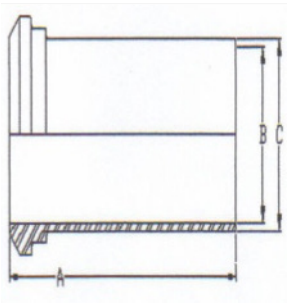

SS14AHT: Plain Bevel Seat *TYGON® Hose* Adapter					
Tube OD (Size)	A	B	C	Part Number 304	Part Number 316L
1"	4.688	0.870	1.000	SS14AHT-1-304	SS14AHT-1-316L
1.5"	4.719	1.370	1.500	SS14AHT-1.5-304	SS14AHT-1.5-316L
2"	4.719	1.870	2.000	SS14AHT-2-304	SS14AHT-2-316L
2.5"	4.844	2.370	2.500	SS14AHT-2.5-304	SS14AHT-2.5-316L
3"	4.906	2.870	3.000	SS14AHT-3-304	SS14AHT-3-316L
4"	5.218	3.834	4.000	SS14AHT-4-304	SS14AHT-4-316L

SS14: *RECESSED* Plain Bevel Seat Ferrule						
Tube OD (Size)	A	B	C	D	Part Number 304	Part Number 316L
1"	0.750	0.500	0.870	1.000	SS14-1-304	SS14-1-316L
1.5"	0.875	0.625	1.370	1.500	SS14-1.5-304	SS14-1.5-316L
2"	0.969	0.688	1.870	2.000	SS14-2-304	SS14-2-316L
2.5"	1.062	0.750	2.370	2.500	SS14-2.5-304	SS14-2.5-316L
3"	1.125	0.813	2.870	3.000	SS14-3-304	SS14-3-316L
4"	1.250	0.938	3.834	4.000	SS14-4-304	SS14-4-316L

SS14R: *RECESSLESS* Plain Bevel Seat Ferrule				
Tube OD (Size)	A	B	Part Number 304	Part Number 316L
1"	0.750	1.000	SS14R-1-304	SS14R-1-316L
1.5"	1.125	1.500	SS14R-1.5-304	SS14R-1.5-316L
2"	1.312	2.000	SS14R-2-304	SS14R-2-316L
2.5"	1.375	2.500	SS14R-2.5-304	SS14R-2.5-316L
3"	1.437	3.000	SS14R-3-304	SS14R-3-316L
4"	1.500	4.000	SS14R-4-304	SS14R-4-316L

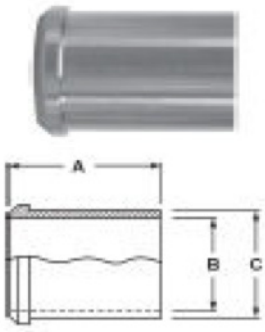

SS14W: *Heavy Tank Spud* Plain Bevel Seat Ferrule					
Tube OD (Size)	A	B	C	Part Number 304	Part Number 316L
1"	2.375	0.870	1.160	SS14W-1-304	SS14W-1-316L
1.5"	2.531	1.370	1.676	SS14W-1.5-304	SS14W-1.5-316L
2"	2.781	1.870	2.192	SS14W-2-304	SS14W-2-316L
2.5"	3.062	2.370	2.708	SS14W-2.5-304	SS14W-2.5-316L
3"	3.531	2.870	3.224	SS14W-3-304	SS14W-3-316L
4"	4.312	3.834	4.256	SS14W-4-304	SS14W-4-316L

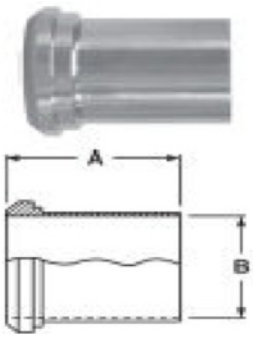

SS14WL: *LIGHT Wall Tank Spud* Plain Bevel Seat Ferrule				
Tube OD (Size)	A	B	Part Number 304	Part Number 316L
1"	2.000	0.870	SS14WL-1-304	SS14WL-1-316L
1.5"	2.250	1.370	SS14WL-1.5-304	SS14WL-1.5-316L
2"	2.500	1.870	SS14WL-2-304	SS14WL-2-316L
2.5"	2.75	2.370	SS14WL-2.5-304	SS14WL-2.5-316L
3"	3.000	2.870	SS14WL-3-304	SS14WL-3-316L
4"	4.000	3.834	SS14WL-4-304	SS14WL-4-316L

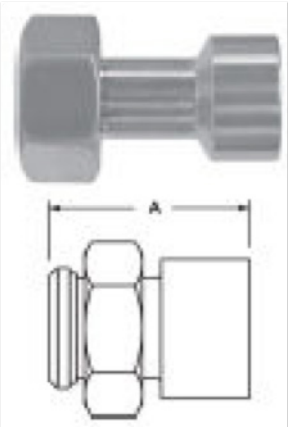

SS14-18: Plain Bevel Seat + Hex Nut (T304) x Female NPT Adapter			
Tube OD (Size)	A	Part Number 304	Part Number 316L
1"	2.500	SS14-18-1-304	SS14-18-1-316L
1.5"	3.250	SS14-18-1.5-304	SS14-18-1.5-316L
2"	3.312	SS14-18-2-304	SS14-18-2-316L
2.5"	3.375	SS14-18-2.5-304	SS14-18-2.5-316L
3"	3.562	SS14-18-3-304	SS14-18-3-316L
4"	3.750	SS14-18-4-304	SS14-18-4-316L

SS14-19: Plain Bevel Seat Ferrule + Hex Nut (304) x Male NPT Adapter			
Tube OD (Size)	A	Part Number 304	Part Number 316L
1"	3.125	SS14-19-1-304	SS14-19-1-316L
1.5"	3.250	SS14-19-1.5-304	SS14-19-1.5-316L
2"	3.312	SS14-19-2-304	SS14-19-2-316L
2.5"	4.000	SS14-19-2.5-304	SS14-19-2.5-316L
3"	4.250	SS14-19-3-304	SS14-19-3-316L
4"	4.312	SS14-19-4-304	SS14-19-4-316L

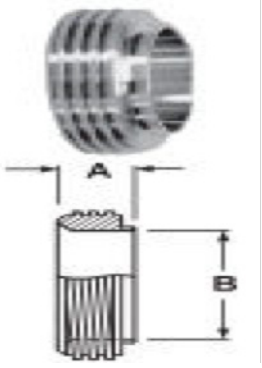

SS15TRF: SHORT Threaded Bevel Seat Ferrule					
Tube OD (Size)	A	B	Weight	Part Number 304 3A	Part Number 316L 3A
1"	0.718	0.870	0.11	SS15TRF-1-304	SS15TRF-1-316L
1.5"	0.718	1.370	0.17	SS15TRF-1.5-304	SS15TRF-1.5-316L
2"	0.750	1.870	0.31	SS15TRF-2-304	SS15TRF-2-316L
2.5"	0.875	2.370	0.47	SS15TRF-2.5-304	SS15TRF-2.5-316L
3"	0.906	2.870	0.65	SS15TRF-3-304	SS15TRF-3-316L
4"	1.031	3.834	1.19	SS15TRF-4-304	SS15TRF-4-316L

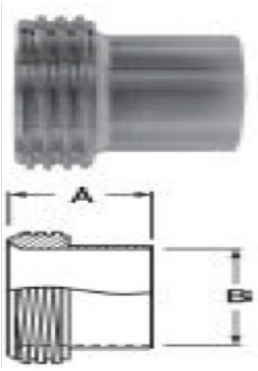

SS15A: LONG *Threaded* Bevel Seat Ferrule					
Tube OD (Size)	A	B	Weight	Part Number 304 3A	Part Number 316L 3A
1"	1.375	0.870	0.17	SS15A-1-304	SS15A-1-316L
1.5"	1.500	1.370	0.32	SS15A-1.5-304	SS15A-1.5-316L
2"	1.500	1.870	0.41	SS15A-2-304	SS15A-2-316L
2.5"	1.750	2.370	0.66	SS15A-2.5-304	SS15A-2.5-316L
3"	1.750	2.870	0.91	SS15A-3-304	SS15A-3-316L
4"	1.750	3.834	1.35	SS15A-4-304	SS15A-4-316L

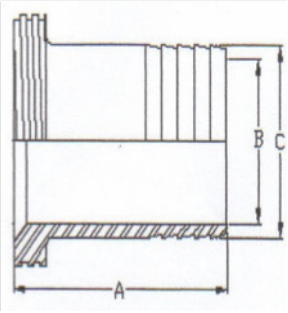

SS15AHR: Threaded Bevel Seat Ferrule *Rubber Hose* Adapter					
Tube OD (Size)	A	B	C	Part Number 304	Part Number 316L
1"	1.687	0.870	1.000	SS15AHR-1-304	SS15AHR-1-316L
1.5"	1.687	1.370	1.500	SS15AHR-1.5-304	SS15AHR-1.5-316L
2"	2.312	1.870	2.000	SS15AHR-2-304	SS15AHR-2-316L
2.5"	2.343	2.370	2.500	SS15AHR-2.5-304	SS15AHR-2.5-316L
3"	3.500	2.870	3.000	SS15AHR-3-304	SS15AHR-3-316L
4"	4.000	3.834	4.000	SS15AHR-4-304	SS15AHR-4-316L

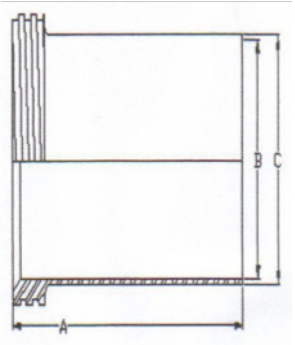

SS15AHT: Threaded Bevel Seat Ferrule *TYGON® Hose* Adapter					
Tube OD (Size)	A	B	C	Part Number 304	Part Number 316L
1"	4.500	0.870	1.000	SS15AHT-1-304	SS15AHT-1-316L
1.5"	4.500	1.370	1.500	SS15AHT-1.5-304	SS15AHT-1.5-316L
2"	4.500	1.870	2.000	SS15AHT-2-304	SS15AHT-2-316L
2.5"	4.500	2.370	2.500	SS15AHT-2.5-304	SS15AHT-2.5-316L
3"	4.500	2.870	3.000	SS15AHT-3-304	SS15AHT-3-316L
4"	5.000	3.834	4.000	SS15AHT-4-304	SS15AHT-4-316L

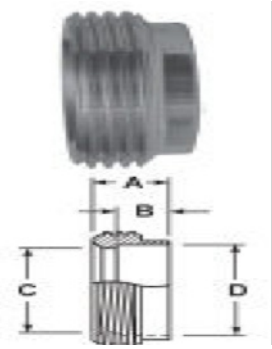

SS15: *RECESSED* Threaded Bevel Seat Ferrule						
Tube OD (Size)	A	B	C	D	Part Number 304	Part Number 316L
1"	0.812	0.500	0.870	1.000	SS15-1-304	SS15-1-316L
1.5"	0.875	0.625	1.370	1.500	SS15-1.5-304	SS15-1.5-316L
2"	1.031	0.688	1.870	2.000	SS15-2-304	SS15-2-316L
2.5"	1.125	0.750	2.370	2.500	SS15-2.5-304	SS15-2.5-316L
3"	1.250	0.813	2.870	3.000	SS15-3-304	SS15-3-316L
4"	1.375	0.938	3.834	4.000	SS15-4-304	SS15-4-316L

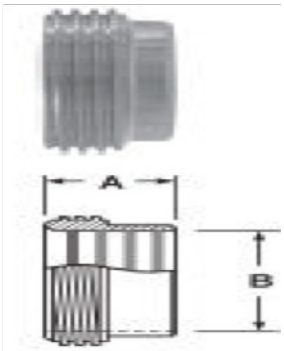

SS15R: *RECESSLESS* Threaded Bevel Seat Ferrule				
Tube OD (Size)	A	B	Part Number 304	Part Number 316L
1"	0.812	1.000	SS15R-1-304	SS15R-1-316L
1.5"	1.125	1.500	SS15R-1.5-304	SS15R-1.5-316L
2"	1.375	2.000	SS15R-2-304	SS15R-2-316L
2.5"	1.500	2.500	SS15R-2.5-304	SS15R-2.5-316L
3"	1.675	3.000	SS15R-3-304	SS15R-3-316L
4"	1.675	4.000	SS15R-4-304	SS15R-4-316L

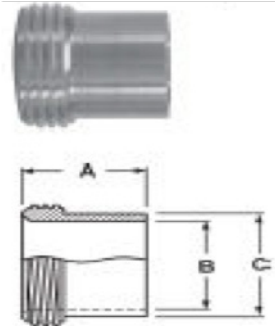

SS15W: *Heavy Tank Wall* Threaded Bevel Seat Ferrule					
Tube OD (Size)	A	B	C	Part Number 304	Part Number 316L
1"	1.500	0.870	1.250	SS15W-1-304	SS15W-1-316L
1.5"	1.625	1.370	1.750	SS15W-1.5-304	SS15W-1.5-316L
2"	1.750	1.870	2.312	SS15W-2-304	SS15W-2-316L
2.5"	1.750	2.370	2.875	SS15W-2.5-304	SS15W-2.5-316L
3"	1.812	2.870	3.375	SS15W-3-304	SS15W-3-316L
4"	2.125	3.834	4.250	SS15W-4-304	SS15W-4-316L

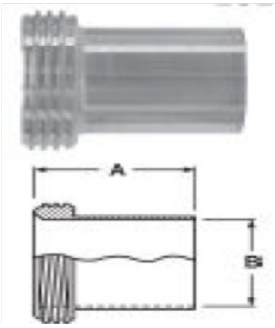

SS15WL: *LIGHT Tank Wall* Threaded Bevel Seat Ferrule				
Tube OD (Size)	A	B	Part Number 304	Part Number 316L
1"	2.000	0.870	SS15WL-1-304	SS15WL-1-316L
1.5"	2.250	1.370	SS15WL-1.5-304	SS15WL-1.5-316L
2"	2.500	1.870	SS15WL-2-304	SS15WL-2-316L
2.5"	2.750	2.370	SS15WL-2.5-304	SS15WL-2.5-316L
3"	3.000	2.870	SS15WL-3-304	SS15WL-3-316L
4"	4.000	3.834	SS15WL-4-304	SS15WL-4-316L

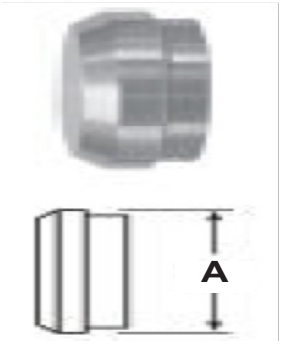

SS16A--- *Plain* Bevel End Cap				
Tube OD (Size)	A		Part Number 304	Part Number 316L
1"	1.312		SS16A-1-304	SS16A-1-316L
1.5"	1.843		SS16A-1.5-304	SS16A-1.5-316L
2"	2.375		SS16A-2-304	SS16A-2-316L
2.5"	2.906		SS16A-2.5-304	SS16A-2.5-316L
3"	3.437		SS16A-3-304	SS16A-3-316L
4"	4.500		SS16A-4-304	SS16A-4-316L

SS16AT---*Threaded* Bevel End Cap				
Tube OD (Size)	A	B	Part Number 304	Part Number 316L
1"	1.250	2.000	SS16AT-1-304	SS16AT-1-316L
1.5"	1.250	2.000	SS16AT-1.5-304	SS16AT-1.5-316L
2"	1.281	2.625	SS16AT-2-304	SS16AT-2-316L
2.5"	1.190	3.570	SS16AT-2.5-304	SS16AT-2.5-316L
3"	1.285	4.185	SS16AT-3-304	SS16AT-3-316L
4"	1.505	5.360	SS16AT-4-304	SS16AT-4-316L

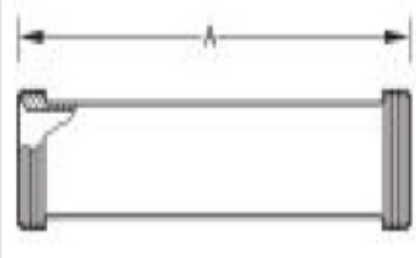

SS17C-Threaded Bevel Seat Each End Tube Assembly			
Tube OD (Size)	A	Part Number 304	Part Number 316L
1"	1.375	SS17C-1-304**	SS17C-1-316L**
1.5"	1.437	SS17C-1.5-304**	SS17C-1.5-316L**
2"	1.437	SS17C-2-304**	SS17C-2-316L**
2.5"	1.687	SS17C-2.5-304**	SS17C-2.5-316L**
3"	1.812	SS17C-3-304**	SS17C-3-316L**
4"	2.437	SS17C-4-304**	SS17C-4-316L**
** Note: When ordering, please indicate length needed! *Made to Order*			

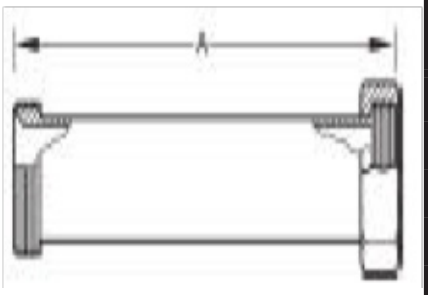

SS17D-Threaded Bevel Seat x Plain Bevel Seat + Hex Nut (T304) Tube Assembly			
Tube OD (Size)	A	Part Number 304	Part Number 316L
1"	2.875	SS17D-1-304**	SS17D-1-316L**
1.5"	3.125	SS17D-1.5-304**	SS17D-1.5-316L**
2"	3.375	SS17D-2-304**	SS17D-2-316L**
2.5"	3.750	SS17D-2.5-304**	SS17D-2.5-316L**
3"	3.875	SS17D-3-304**	SS17D-3-316L**
4"	4.625	SS17D-4-304**	SS17D-4-316L**
** Note: When ordering, please indicate length needed! *Made to Order*			

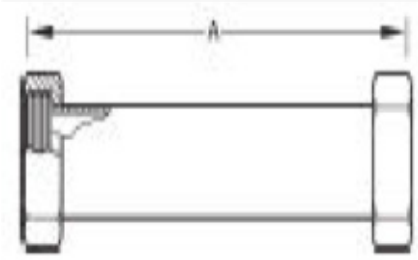

SS17E- Plain Bevel Seat x Plain Bevel Seat + Hex Nut (304) Tube Assembly			
Tube OD (Size)	A	Part Number 304	Part Number 316L
1"	2.875	SS17E-1-304**	SS17E-1-316L**
1.5"	3.125	SS17E-1.5-304**	SS17E-1.5-316L**
2"	3.375	SS17E-2-304**	SS17E-2-316L**
2.5"	3.750	SS17E-2.5-304**	SS17E-2.5-316L**
3"	3.875	SS17E-3-304**	SS17E-3-316L**
4"	4.625	SS17E-4-304**	SS17E-4-316L**
** Note: When ordering, please indicate length needed! *Made to Order*			

Call Sanitary Solutions for various Bevel Seat combinations

SS2K

SS2P

SS7

SS7A

SS7B

SS9

SS9A

SS21

SS22

SS28L

SS28BY

SANITARY SOLUTIONS INC.

Bulldog Fittings/Valves...Bulldog Tough.

Sanitary Solutions John Perry Fittings

Sanitary Solutions John Perry Fittings meet all 3-A requirements.
John Perry Fittings Stocking Alloys: T304 or T316L
John Perry Fittings Sizes: 1"– 4" OD Tube

Note: OD Tube and Pipe Sizes do not interchange!
John Perry Sanitary Finish: 180 Grit Polish
John Perry Fittings are FLAT FACED not Beveled!!!

Sanitary Solutions Clamp Fittings Part Number Breakdown:

SS	Part Number	Size	Alloy
Sanitary Solutions	14PRFJP	2"	304 or 316L

SS2CJP7: 90° Elbow, Threaded John Perry Ferrule on Both Ends			
Tube OD (Size)	A	Part Number 304	Part Number 316L
1"	2.219	SS2CJP7-1-304	SS2CJP7-1-316L
1.5"	2.969	SS2CJP7-1.5-304	SS2CJP7-1.5-316L
2"	3.750	SS2CJP7-2-304	SS2CJP7-2-316L
2.5"	4.620	SS2CJP7-2.5-304	SS2CJP7-2.5-316L
3"	5.406	SS2CJP7-3-304	SS2CJP7-3-316L
4"	7.030	SS2CJP7-4-304	SS2CJP7-4-316L

SS2EJP7: 90° Elbow, Plain John Perry Ferrule & Hex Nut (304) on Both Ends			
Tube OD (Size)	A	Part Number 304	Part Number 316L
1"	2.219	SS2EJP7-1-304	SS2EJP7-1-316L
1.5"	2.969	SS2EJP7-1.5-304	SS2EJP7-1.5-316L
2"	3.750	SS2EJP7-2-304	SS2EJP7-2-316L
2.5"	4.620	SS2EJP7-2.5-304	SS2EJP7-2.5-316L
3"	5.406	SS2EJP7-3-304	SS2EJP7-3-316L
4"	7.030	SS2EJP7-4-304	SS2EJP7-4-316L

SS2FJP7: 90° Elbow, 15TRFJP on one end x 14PRFJP & Hex Nut (304) on 14PRF End, Polish ID/OD				
Tube OD (Size)	A	B	Part Number 304	Part Number 316L
1"	2.219	2.219	SS2FJP7-1-304	SS2FJP7-1-316L
1.5"	2.969	2.969	SS2FJP7-1.5-304	SS2FJP7-1.5-316L
2"	3.750	3.750	SS2FJP7-2-304	SS2FJP7-2-316L
2.5"	4.620	4.620	SS2FJP7-2.5-304	SS2FJP7-2.5-316L
3"	5.406	5.406	SS2FJP7-3-304	SS2FJP7-3-316L
4"	7.030	7.030	SS2FJP7-4-304	SS2FJP7-4-316L

SS2UJP7: 180° Return Bend, Plain John Perry Ferrule & Hex Nut (304) on Both Ends			
Tube OD (Size)	A	Part Number 304	Part Number 316L
1"	3.000	SS2UJP7-1-304	SS2UJP7-1-316L
1.5"	4.500	SS2UJP7-1.5-304	SS2UJP7-1.5-316L
2"	6.000	SS2UJP7-2-304	SS2UJP7-2-316L
2.5"	7.500	SS2UJP7-2.5-304	SS2UJP7-2.5-316L
3"	9.000	SS2UJP7-3-304	SS2UJP7-3-316L
4"	12.00	SS2UJP7-4-304	SS2UJP7-4-316L

SS13H: Union Hex Nut, John Perry			
Tube OD (Size)	A	B	Part Number 304
1"	0.906	1.812	SS13H-1-304
1.5"	0.968	2.406	SS13H-1.5-304
2"	1.062	3.000	SS13H-2-304
2.5"	1.187	3.594	SS13H-2.5-304
3"	1.281	4.188	SS13H-3-304
4"	1.500	5.438	SS13H-4-304

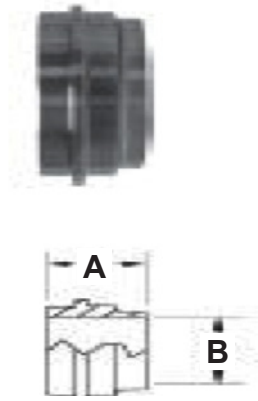

SS14PRFJP: John Perry *SHORT Plain* Bevel Ferrule				
Tube OD (Size)	A	B	Part Number 304	Part Number 316L
1"	0.719	0.870	SS14PRFJP-1-304	SS14PRFJP-1-316L
1.5"	0.719	1.370	SS14PRFJP-1.5-304	SS14PRFJP-1.5-316L
2"	0.750	1.870	SS14PRFJP-2-304	SS14PRFJP-2-316L
2.5"	0.870	2.370	SS14PRFJP-2.5-304	SS14PRFJP-2.5-316L
3"	0.906	2.870	SS14PRFJP-3-304	SS14PRFJP-3-316L
4"	1.030	3.834	SS14PRFJP-4-304	SS14PRFJP-4-316L

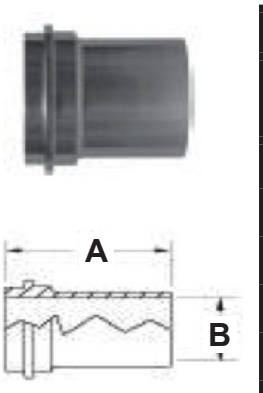

SS14AJP: John Perry *LONG Plain* Bevel Ferrule				
Tube OD (Size)	A	B	Part Number 304	Part Number 316L
1"	1.375	0.870	SS14AJP-1-304	SS14AJP-1-316L
1.5"	1.500	1.370	SS14AJP-1.5-304	SS14AJP-1.5-316L
2"	1.500	1.870	SS14AJP-2-304	SS14AJP-2-316L
2.5"	1.750	2.370	SS14AJP-2.5-304	SS14AJP-2.5-316L
3"	1.750	2.870	SS14AJP-3-304	SS14AJP-3-316L
4"	1.750	3.834	SS14AJP-4-304	SS14AJP-4-316L

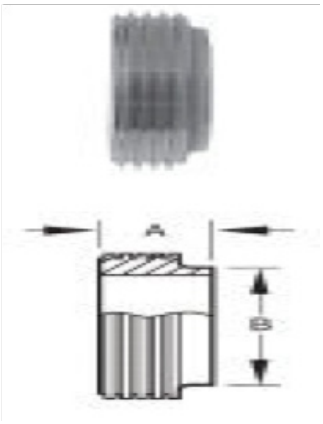

SS15TRFJP: John Perry *SHORT Threaded* Bevel Ferrule				
Tube OD (Size)	A	B	Part Number 304	Part Number 316L
1"	0.719	0.870	SS15TRFJP-1-304	SS15TRFJP-1-316L
1.5"	0.719	1.370	SS15TRFJP-1.5-304	SS15TRFJP-1.5-316L
2"	0.750	1.870	SS15TRFJP-2-304	SS15TRFJP-2-316L
2.5"	0.870	2.370	SS15TRFJP-2.5-304	SS15TRFJP-2.5-316L
3"	0.906	2.870	SS15TRFJP-3-304	SS15TRFJP-3-316L
4"	1.030	3.834	SS15TRFJP-4-304	SS15TRFJP-4-316L

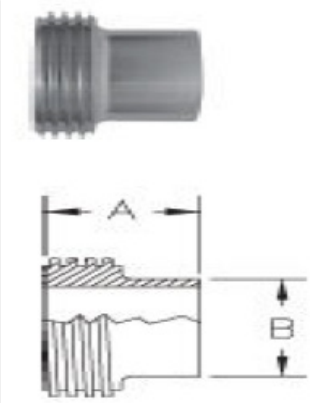

SS15AJP: John Perry *LONG Threaded* Bevel Ferrule				
Tube OD (Size)	A	B	Part Number 304	Part Number 316L
1"	1.375	0.870	SS15AJP-1-304	SS15AJP-1-316L
1.5"	1.500	1.370	SS15AJP-1.5-304	SS15AJP-1.5-316L
2"	1.500	1.870	SS15AJP-2-304	SS15AJP-2-316L
2.5"	1.750	2.370	SS15AJP-2.5-304	SS15AJP-2.5-316L
3"	1.750	2.870	SS15AJP-3-304	SS15AJP-3-316L
4"	1.750	3.834	SS15AJP-4-304	SS15AJP-4-316L

SS16AJP--- John Perry Solid End Cap				
Tube OD (Size)	A		Part Number 304	Part Number 316L
1"	1.125		SS16AJP-1-304	SS16AJP-1-316L
1.5"	1.656		SS16AJP-1.5-304	SS16AJP-1.5-316L
2"	2.187		SS16AJP-2-304	SS16AJP-2-316L
2.5"	2.656		SS16AJP-2.5-304	SS16AJP-2.5-316L
3"	3.187		SS16AJP-3-304	SS16AJP-3-316L
4"	4.187		SS16AJP-4-304	SS16AJP-4-316L

SANITARY SOLUTIONS INC.

Bulldog Fittings/Valves...Bulldog Tough.

Sanitary Solutions Tube O.D. Weld Fittings

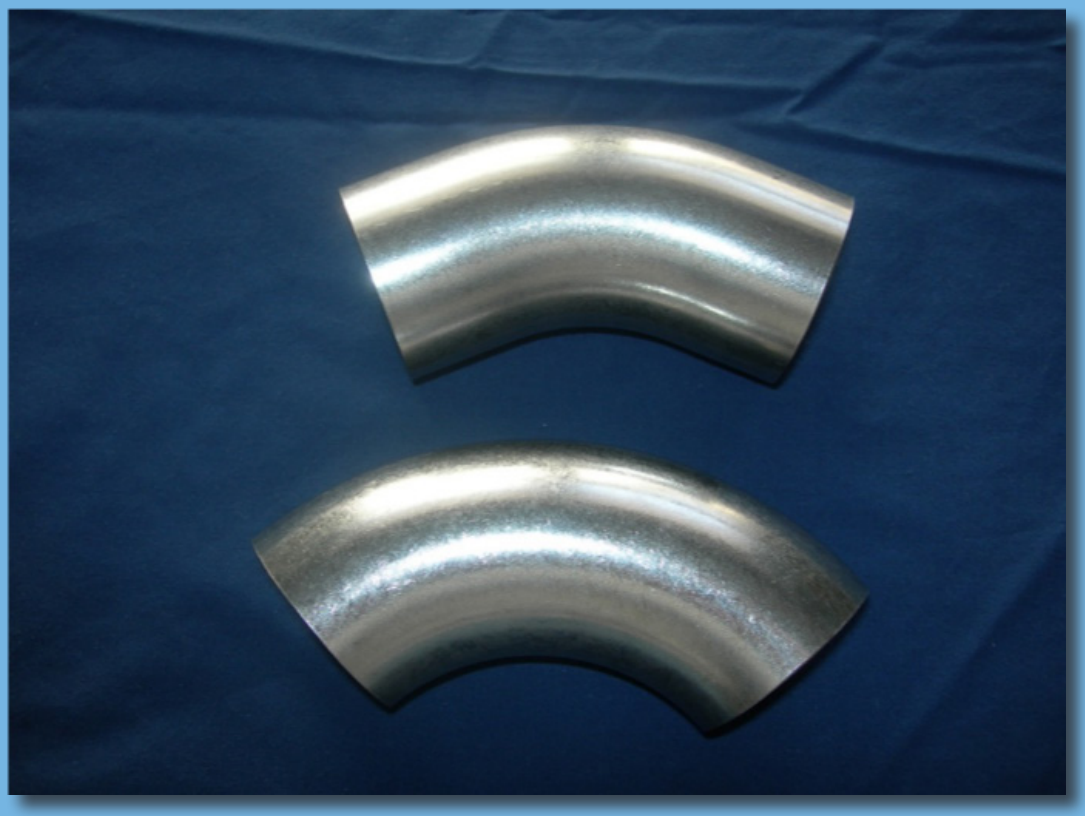

Mill Finish Tube OD Weld Fittings Alloys: T304 or T316L

Mill Finish Tube OD Weld Fittings Sizes: ½" – 12" OD Tube

Note: OD Tube and Pipe Sizes do not interchange!

Tube OD Weld Fittings Finish: UNPOLISHED ID/OD

Sanitary Solutions Clamp Fittings Part Number Breakdown:

SS	Part Number	Size	Alloy
Sanitary Solutions	2S1	2"	304 or 316L
	1=Unpolished ID/OD		

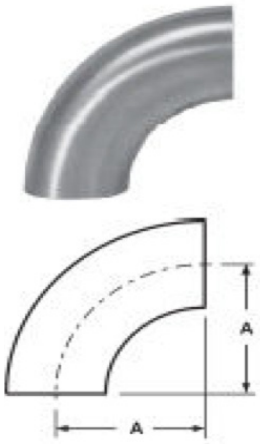

SS2WCL1--- 90° Buttweld Elbow (1.5 x CLR), Mill Finish ID/OD

Tube OD (Size)	A	Nominal Wall	Weight	Part Number 304	Part Number 316L
1/2"	1.125	0.065	0.03		SS2WCL1-0.50-316L
3/4"	1.125	0.065	0.69		SS2WCL1-0.75-316L
1"	1.500	0.065	0.13	SS2WCL1-1-304	SS2WCL1-1-316L
1.5"	2.250	0.065	0.29	SS2WCL1-1.5-304	SS2WCL1-1.5-316L
2"	3.000	0.065	0.52	SS2WCL1-2-304	SS2WCL1-2-316L
2.5"	3.750	0.065	0.87	SS2WCL1-2.5-304	SS2WCL1-2.5-316L
3"	4.500	0.065	1.53	SS2WCL1-3-304	SS2WCL1-3-316L
4"	6.000	0.083	2.85	SS2WCL1-4-304	SS2WCL1-4-316L
6"	9.000	0.109	8.53	SS2WCL1-6-304	SS2WCL1-6-316L
8"	12.00	0.120	15.75	SS2WCL1-8-304	SS2WCL1-8-316L
10"	15.00	0.120	23.5	SS2WCL1-10-304	SS2WCL1-10-316L
12"	18.00	0.120	26.0	SS2WCL1-12-304	SS2WCL1-12-316L

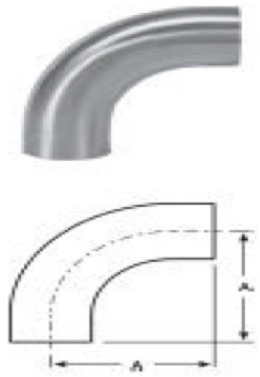

SS2S1-- 90° Buttweld Elbow w/Tangents, Mill Finish ID/OD

Tube OD (Size)	A	Nominal Wall	Weight	Part Number 304	Part Number 316L
1/2"	3.000	0.065	0.18		SS2S1-0.50-316L
3/4"	3.000	0.065	0.31		SS2S1-0.75-316L
1"	2.062	0.065	0.18	SS2S1-1-304	SS2S1-1-316L
1.5"	2.937	0.065	0.44	SS2S1-1.5-304	SS2S1-1.5-316L
2"	4.062	0.065	0.79	SS2S1-2-304	SS2S1-2-316L
2.5"	5.187	0.065	1.29	SS2S1-2.5-304	SS2S1-2.5-316L
3"	6.312	0.065	1.88	SS2S1-3-304	SS2S1-3-316L
4"	8.312	0.083	4.25	SS2S1-4-304	SS2S1-4-316L

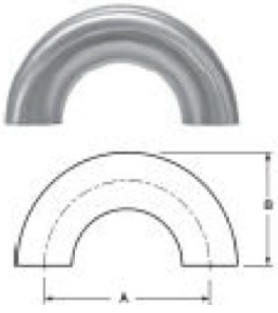

SS2WUL1--180° Buttweld Return Bend, Mill Finish ID/OD

Tube OD (Size)	A	B	Nominal Wall	Weight	Part Number 304	Part Number 316L
1"	3.000	2.000	0.065	0.27	SS2WUL1-1-304	SS2WUL1-1-316L
1.5"	4.500	3.000	0.065	0.63	SS2WUL1-1.5-304	SS2WUL1-1.5-316L
2"	6.000	4.000	0.065	1.05	SS2WUL1-2-304	SS2WUL1-2-316L
2.5"	7.500	5.000	0.065	1.57	SS2WUL1-2.5-304	SS2WUL1-2.5-316L
3"	9.000	6.000	0.065	2.33	SS2WUL1-3-304	SS2WUL1-3-316L
4"	12.00	8.000	0.083	5.21	SS2WUL1-4-304	SS2WUL1-4-316L

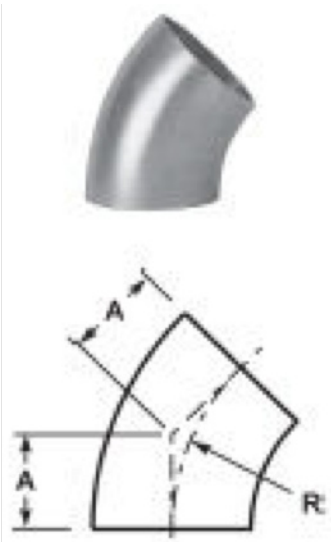

SS2WK1- 45° Buttweld Elbow, less tangent, Mill Finish ID/OD

Tube OD (Size)	A	R	Nominal Wall	Weight	Part Number 304	Part Number 316L
1/2"	0.518	1.125	0.065	0.01		SS2WK1-0.50-316L
3/4"	0.466	1.125	0.065	0.03		SS2WK1-0.75-316L
1"	0.625	1.500	0.065	0.08	SS2WK1-1-304	SS2WK1-1-316L
1.5"	0.937	2.250	0.065	0.15	SS2WK1-1.5-304	SS2WK1-1.5-316L
2"	1.250	3.000	0.065	0.26	SS2WK1-2-304	SS2WK1-2-316L
2.5"	1.562	3.750	0.065	0.44	SS2WK1-2.5-304	SS2WK1-2.5-316L
3"	1.875	4.500	0.065	0.77	SS2WK1-3-304	SS2WK1-3-316L
4"	2.500	6.000	0.083	1.43	SS2WK1-4-304	SS2WK1-4-316L
6"	3.750	9.000	0.109	4.26	SS2WK1-6-304	SS2WK1-6-316L
8"	5.000	12.00	0.120	7.50	SS2WK1-8-304	SS2WK1-8-316L
10"	6.250	15.00	0.120	11.5	SS2WK1-10-304	SS2WK1-10-316L
12"	7.500	18.00	0.120	13.0	SS2WK1-12-304	SS2WK1-12-316L

SS2KS1---- 45° Buttweld Elbow w/Tangent, Mill Finish ID/OD

Tube OD (Size)	A	Nominal Wall	Weight	Part Number 304	Part Number 316L
1/2"	2.250	0.065	0.13		SS2KS1-0.50-316L
3/4"	2.250	0.065	0.23		SS2KS1-0.75-316L
1"	1.188	0.065	0.15	SS2KS1-1-304	SS2KS1-1-316L
1.5"	1.625	0.065	0.30	SS2KS1-1.5-304	SS2KS1-1.5-316L
2"	2.312	0.065	0.50	SS2KS1-2-304	SS2KS1-2-316L
2.5"	3.000	0.065	0.88	SS2KS1-2.5-304	SS2KS1-2.5-316L
3"	3.688	0.065	1.29	SS2KS1-3-304	SS2KS1-3-316L
4"	4.812	0.083	2.53	SS2KS1-4-304	SS2KS1-4-316L

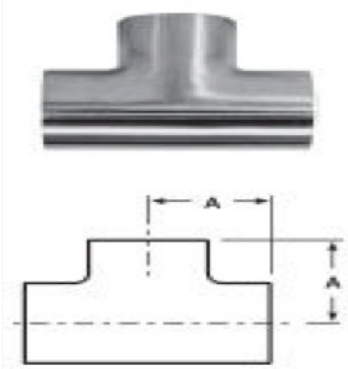

SS7WWW1-- *Short* Buttweld Tee, Mill Finish ID/OD

Tube OD (Size)	A	Nominal Wall	Weight	Part Number 304	Part Number 316L
1"	1.125	0.065	0.12	SS7WWW1-1-304	SS7WWW1-1-316L
1.5"	1.656	0.065	0.23	SS7WWW1-1.5-304	SS7WWW1-1.5-316L
2"	2.062	0.065	0.58	SS7WWW1-2-304	SS7WWW1-2-316L
2.5"	2.344	0.065	0.75	SS7WWW1-2.5-304	SS7WWW1-2.5-316L
3"	2.594	0.065	1.36	SS7WWW1-3-304	SS7WWW1-3-316L
4"	3.438	0.083	2.29	SS7WWW1-4-304	SS7WWW1-4-316L

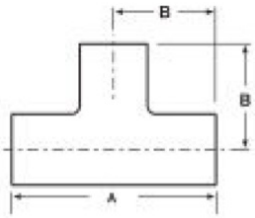

SS7W1--- *Long* Buttweld Tee, Mill Finish ID/OD

Tube OD (Size)	A	B	Nominal Wall	Weight	Part Number 304	Part Number 316L
1/2"	3.750	1.875	0.065	0.11		SS7W1-0.50-316L
3/4"	3.750	1.875	0.065	0.22		SS7W1-0.75-316L
1"	3.750	1.875	0.065	0.28	SS7W1-1-304	SS7W1-1-316L
1.5"	4.500	2.250	0.065	0.46	SS7W1-1.5-304	SS7W1-1.5-316L
2"	6.000	3.000	0.065	0.98	SS7W1-2-304	SS7W1-2-316L
2.5"	6.000	3.000	0.065	1.32	SS7W1-2.5-304	SS7W1-2.5-316L
3"	6.500	3.250	0.065	1.76	SS7W1-3-304	SS7W1-3-316L
4"	7.750	3.875	0.083	2.89	SS7W1-4-304	SS7W1-4-316L
6"	11.25	5.625	0.109	8.00	SS7W1-6-304	SS7W1-6-316L
8"	14.00	7.000	0.120	12.5	SS7W1-8-304	SS7W1-8-316L
10"	17.00	8.500	0.120	18.5	SS7W1-10-304	SS7W1-10-316L
12"	20.00	10.00	0.120	19.0	SS7W1-12-304	SS7W1-12-316L

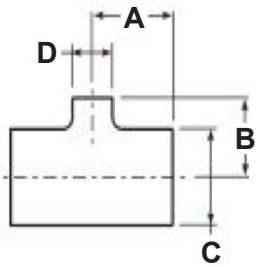

SS7RWWW1: Buttweld Reducing Tee, Mill Finish ID/OD

Tube OD (Size)	A	B	C	D	Weight	Part Number 304	Part Number 316L
3/4" x 1/2"	2.000	2.000	0.750	0.500	0.11		SS7RWWW1-0.75 x 0.50-316L
1" x 1/2"	2.125	2.125	1.000	0.500	0.11		SS7RWWW1- 1 x 0.50- 316L
1" x 3/4"	2.125	2.125	1.000	0.750	0.19		SS7RWWW1- 1 x 0.75- 316L
1.5" x 1/2"	2.375	2.375	1.500	0.500	0.21		SS7RWWW1- 1.5 x 0.50- 316L
1.5" x 3/4"	2.375	2.375	1.500	0.750	0.26		SS7RWWW1- 1.5 x 0.75- 316L
1.5" x 1"	1.656	1.375	1.500	1.000	0.31	SS7RWWW1- 1.5 x 1- 304	SS7RWWW1- 1.5 x 1- 316L
2" x 1"	2.062	1.625	2.000	1.000	0.35	SS7RWWW1- 2 x 1- 304	SS7RWWW1- 2 x 1- 316L
2" x 1.5"	2.062	1.906	2.000	1.500	0.75	SS7RWWW1- 2 x 1.5- 304	SS7RWWW1- 2 x 1.5- 316L
2.5" x 1.5"	2.344	2.156	2.500	1.500	0.76	SS7RWWW1- 2.5 x 1.5- 304	SS7RWWW1- 2.5 x 1.5- 316L
2.5" x 2"	2.344	2.312	2.500	2.000	0.80	SS7RWWW1- 2.5 x 2- 304	SS7RWWW1- 2.5 x 2- 316L
3" x 1"	2.594	2.406	3.000	1.000	0.82	SS7RWWW1- 3 x 1-304	SS7RWWW1- 3 x 1- 316L
3" x 1.5"	2.594	2.406	3.000	1.500	1.01	SS7RWWW1- 3 x 1.5- 304	SS7RWWW1- 3 x 1.5- 316L
3" x 2"	2.594	2.562	3.000	2.000	1.01	SS7RWWW1- 3 x 2- 304	SS7RWWW1- 3 x 2- 316L
3" x 2.5"	2.594	2.594	3.000	2.500	1.03	SS7RWWW1- 3 x 2.5- 304	SS7RWWW1- 3 x 2.5- 316L
4" x 1.0"	3.438	2.906	4.000	1.000	1.08	SS7RWWW1- 4 x 1- 304	SS7RWWW1- 4 x 1- 316L
4" x 1.5"	3.438	2.906	4.000	1.500	2.14	SS7RWWW1- 4 x 1.5- 304	SS7RWWW1- 4 x 1.5- 316L
4" x 2"	3.438	3.062	4.000	2.000	2.14	SS7RWWW1- 4 x 2- 304	SS7RWWW1- 4 x 2- 316L
4" x 2.5"	3.438	3.093	4.000	2.500	2.25	SS7RWWW1- 4 x 2.5- 304	SS7RWWW1- 4 x 2.5- 316L
4" x 3"	3.438	3.093	4.000	3.000	2.35	SS7RWWW1- 4 x 3- 304	SS7RWWW1- 4 x 3- 316L
6" x 2"	5.625	4.500	6.000	2.000	2.46	SS7RWWW1- 6 x 2- 304	SS7RWWW1- 6 x 2- 316L
6" x 3"	5.625	4.875	6.000	3.000	5.75	SS7RWWW1- 6 x 3- 304	SS7RWWW1- 6 x 3- 316L
6" x 4"	5.625	5.125	6.000	4.000	5.75	SS7RWWW1- 6 x 4- 304	SS7RWWW1- 6 x 4- 316L

SS16W-- *WELD* End Caps, Machine Finish

Tube OD (Size)	A	Weight	Part Number 304	Part Number 316L	
1/2"	0.250	0.02	SS16W-0.50-304	SS16W-0.50-316L	*NEW!*
3/4"	0.312	0.04	SS16W-0.75-304	SS16W-0.75-316L	*NEW!*
1"	0.375	0.05	SS16W-1-304	SS16W-1-316L	
1.5"	0.562	0.09	SS16W-1.5-304	SS16W-1.5-316L	
2"	0.750	0.25	SS16W-2-304	SS16W-2-316L	
2.5"	1.000	0.29	SS16W-2.5-304	SS16W-2.5-316L	
3"	1.250	0.33	SS16W-3-304	SS16W-3-316L	
4"	1.500	0.56	SS16W-4-304	SS16W-4-316L	
6"	2.000	1.40	SS16W-6-304	SS16W-6-316L	*NEW!*
8"	2.500	2.40	SS16W-8-304	SS16W-8-316L	*NEW!*
10"	3.000	CALL	SS16W-10-304	SS16W-10-316L	
12"	3.000	CALL	SS16W-12-304	SS16W-12-316L	

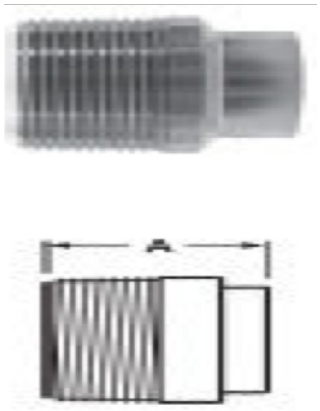

SS19WB--- Weld End x *Male NPT Adapter,* Machine Finish

Tube OD (Size)	A	Nominal Wall	Weight	Part Number 304	Part Number 316L	
1/2"	1.625	0.065	0.02	SS19WB-0.50-304	SS19WB-0.50-316L	*NEW!*
3/4"	1.625	0.065	0.08	SS19WB-0.75-304	SS19WB-0.75-316L	*NEW!*
1"	1.750	0.065	0.50	SS19WB-1-304	SS19WB-1-316L	
1.5"	1.750	0.065	0.60	SS19WB-1.5-304	SS19WB-1.5-316L	
2"	1.812	0.065	0.75	SS19WB-2-304	SS19WB-2-316L	
2.5"	2.312	0.065	1.20	SS19WB-2.5-304	SS19WB-2.5-316L	
3"	2.500	0.065	2.00	SS19WB-3-304	SS19WB-3-316L	
4"	2.562	0.083	2.60	SS19WB-4-304	SS19WB-4-316L	
6"	3.000	0.109	CALL	SS19WB-6-304	SS19WB-6-316L	*NEW!*

SS22WB--- Weld End x *Female NPT Adapter, Machine Finish*

Tube OD (Size)	A	Nominal Wall	Weight	Part Number 304	Part Number 316L	
1/2"	1.250	0.065	0.38	SS22WB-0.50-304	SS22WB-0.50-316L	*NEW!*
3/4"	1.625	0.065	0.43	SS22WB-0.75-304	SS22WB-0.75-316L	*NEW!*
1"	1.125	0.065	0.75	SS22WB-1-304	SS22WB-1-316L	
1.5"	1.437	0.065	0.80	SS22WB-1.5-304	SS22WB-1.5-316L	
2"	1.437	0.065	1.00	SS22WB-2-304	SS22WB-2-316L	
2.5"	1.625	0.065	2.20	SS22WB-2.5-304	SS22WB-2.5-316L	
3"	1.812	0.065	3.50	SS22WB-3-304	SS22WB-3-316L	
4"	2.000	0.083	5.40	SS22WB-4-304	SS22WB-4-316L	

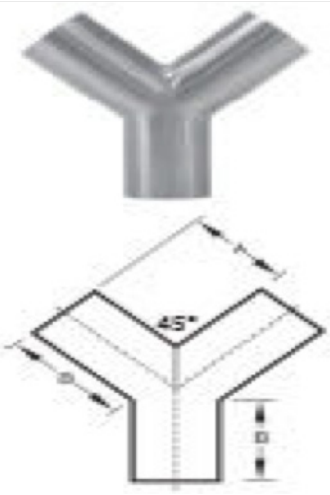

SS28Y1--- Buttweld *True "Y"*, Mill Finish ID/OD

Tube OD (Size)	A	B	Nominal Wall	Weight	Part Number 304	Part Number 316L
1"	2.500	2.250	0.065	0.55	SS28Y1-1-304	SS28Y1-1-316L
1.5"	2.750	2.250	0.065	0.95	SS28Y1-1.5-304	SS28Y1-1.5-316L
2"	8.625	3.000	0.065	1.26	SS28Y1-2-304	SS28Y1-2-316L
2.5"	4.875	3.750	0.065	1.95	SS28Y1-2.5-304	SS28Y1-2.5-316L
3"	5.375	4.250	0.065	2.63	SS28Y1-3-304	SS28Y1-3-316L
4"	7.500	5.750	0.083	4.58	SS28Y1-4-304	SS28Y1-4-316L
6"	8.625	7.813	0.109	13.5	SS28Y1-6-304	SS28Y1-6-316L

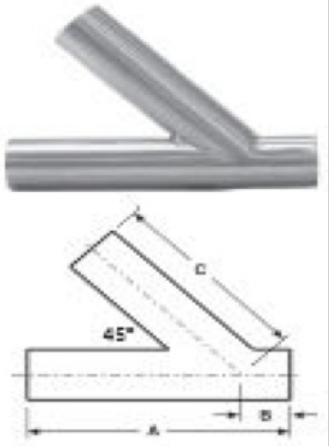

SS28L1-- Buttweld *Lateral "Y"*, Mill Finish ID/OD

Tube OD (Size)	A	B	C	Nominal Wall	Weight	Part Number 304	Part Number 316L
1"	5.937	0.625	5.375	0.065	0.62	SS28L1-1-304	SS28L1-1-316L
1.5"	7.313	1.000	6.500	0.065	1.35	SS28L1-1.5-304	SS28L1-1.5-316L
2"	8.687	1.375	7.562	0.065	1.55	SS28L1-2-304	SS28L1-2-316L
2.5"	10.00	1.500	8.875	0.065	2.02	SS28L1-2.5-304	SS28L1-2.5-316L
3"	10.75	1.500	9.125	0.065	3.00	SS28L1-3-304	SS28L1-3-316L
4"	12.81	2.750	12.00	0.083	5.42	SS28L1-4-304	SS28L1-4-316L
6"	16.50	4.000	14.75	0.109	14.5	SS28L1-6-304	SS28L1-6-316L

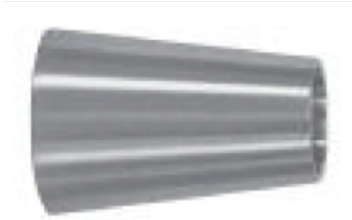

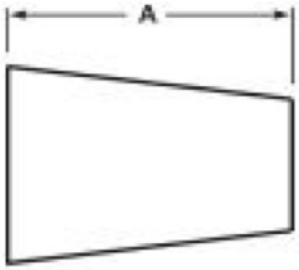

SS31W1-- Buttweld *Concentric* Reducer, Mill Finish ID/OD							
Tube OD (Size)	A	B	C	Nominal Wall	Weight	Part Number 304	Part Number 316L
3/4" x 1/2"	1.000	0.750	0.500	0.065	0.06		SS31W1- .75 x .50- 316L
1" x 1/2"	1.000	1.000	0.500	0.065	0.08		SS31W1- 1 x .50- 316L
1" x 3/4"	1.000	1.000	0.750	0.065	0.07		SS31W1- 1 x .75- 316L
1.5" x 1/2"	2.000	1.500	0.500	0.065	0.21		SS31W1- 1.5 x .50- 316L
1.5" x 3/4"	2.000	1.500	0.750	0.065	0.20		SS31W1- 1.5 x .75- 316L
1.5" x 1"	2.000	1.500	1.000	0.065	0.12	SS31W1- 1.5 x 1- 304	SS31W1- 1.5 x 1- 316L
2" x 1"	4.000	2.000	1.000	0.065	0.34	SS31W1- 2 x 1- 304	SS31W1- 2 x 1- 316L
2" x 1.5"	2.000	1.500	1.500	0.065	0.18	SS31W1- 2 x 1.5- 304	SS31W1- 2 x 1.5- 316L
2.5" x 1.5"	4.000	2.500	1.500	0.065	0.43	SS31W1- 2.5 x 1.5- 304	SS31W1- 2.5 x 1.5- 316L
2.5" x 2"	2.000	2.500	2.000	0.065	0.25	SS31W1- 2.5 x 2- 304	SS31W1- 2.5 x 2- 316L
3" x 1.5"	6.000	3.000	1.500	0.065	0.93	SS31W1- 3 x 1.5- 304	SS31W1- 3 x 1.5- 316L
3" x 2"	4.000	3.000	2.000	0.065	0.55	SS31W1- 3 x 2- 304	SS31W1- 3 x 2- 316L
3" x 2.5"	2.000	3.000	2.500	0.065	0.30	SS31W1- 3 x 2.5- 304	SS31W1- 3 x 2.5- 316L
4" x 1.5"	10.00	4.000	1.500	0.083	1.30	SS31W1- 4 x 1.5- 304	SS31W1- 4 x 1.5- 316L
4" x 2"	8.000	4.000	2.000	0.083	1.66	SS31W1- 4 x 2- 304	SS31W1- 4 x 2- 316L
4" x 2.5"	6.000	4.000	2.500	0.083	1.50	SS31W1- 4 x 2.5- 304	SS31W1- 4 x 2.5- 316L
4" x 3"	4.000	4.000	3.000	0.083	1.15	SS31W1- 4 x 3- 304	SS31W1- 4 x 3- 316L
6" x 2"	5.500	6.000	2.000	0.109	2.60	SS31W1- 6 x 2- 304	SS31W1- 6 x 2- 316L
6" x 3"	5.500	6.000	3.000	0.109	2.60	SS31W1- 6 x 3- 304	SS31W1- 6 x 3- 316L
6" x 4"	5.500	6.000	4.000	0.109	1.92	SS31W1- 6 x 4- 304	SS31W1- 6 x 4- 316L
8" x 4"	6.000	8.000	4.000	0.120	3.50	SS31W1- 8 x 4- 304	SS31W1- 8 x 4- 316L
8" x 6"	6.000	8.000	6.000	0.120	3.00	SS31W1- 8 x 6- 304	SS31W1- 8 x 6- 316L

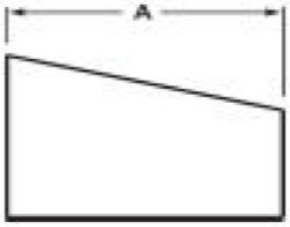

SS32W1-- Buttweld *Eccentric* Reducer, Mill Finish ID/OD							
Tube OD (Size)	A	B	C	Nominal Wall	Weight	Part Number 304	Part Number 316L
3/4" x 1/2"	1.000	0.750	0.500	0.065	0.06		SS32W1- .75 x .50- 316L
1" x 1/2"	1.000	1.000	0.500	0.065	0.08		SS32W1- 1 x .50- 316L
1" x 3/4"	1.000	1.000	0.750	0.065	0.07		SS32W1- 1 x .75- 316L
1.5" x 1/2"	2.000	1.500	0.500	0.065	0.21		SS32W1- 1.5 x .50- 316L
1.5" x 3/4"	2.000	1.500	0.750	0.065	0.20		SS32W1- 1.5 x .75- 316L
1.5" x 1"	2.000	1.500	1.000	0.065	0.12	SS32W1- 1.5 x 1- 304	SS32W1- 1.5 x 1- 316L
2" x 1"	4.000	2.000	1.000	0.065	0.34	SS32W1- 2 x 1- 304	SS32W1- 2 x 1- 316L
2" x 1.5"	2.000	1.500	1.500	0.065	0.18	SS32W1- 2 x 1.5- 304	SS32W1- 2 x 1.5- 316L
2.5" x 1.5"	4.000	2.500	1.500	0.065	0.43	SS32W1- 2.5 x 1.5- 304	SS32W1- 2.5 x 1.5- 316L
2.5" x 2"	2.000	2.500	2.000	0.065	0.25	SS32W1- 2.5 x 2- 304	SS32W1- 2.5 x 2- 316L
3" x 1.5"	6.000	3.000	1.500	0.065	0.93	SS32W1- 3 x 1.5- 304	SS32W1- 3 x 1.5- 316L
3" x 2"	4.000	3.000	2.000	0.065	0.56	SS32W1- 3 x 2- 304	SS32W1- 3 x 2- 316L
3" x 2.5"	2.000	3.000	2.500	0.065	0.30	SS32W1- 3 x 2.5- 304	SS32W1- 3 x 2.5- 316L
4" x 1.5"	10.00	4.000	1.500	0.083	1.59	SS32W1- 4 x 1.5- 304	SS32W1- 4 x 1.5- 316L
4" x 2"	8.000	4.000	2.000	0.083	1.66	SS32W1- 4 x 2- 304	SS32W1- 4 x 2- 316L
4" x 2.5"	6.000	4.000	2.500	0.083	1.50	SS32W1- 4 x 2.5- 304	SS32W1- 4 x 2.5- 316L
4" x 3"	4.000	4.000	3.000	0.083	1.15	SS32W1- 4 x 3- 304	SS32W1- 4 x 3- 316L
6" x 2"	5.500	6.000	2.000	0.109	2.60	SS32W1- 6 x 2- 304	SS32W1- 6 x 2- 316L
6" x 3"	5.500	6.000	3.000	0.109	2.60	SS32W1- 6 x 3- 304	SS32W1- 6 x 3- 316L
6" x 4"	5.500	6.000	4.000	0.109	1.92	SS32W1- 6 x 4- 304	SS32W1- 6 x 4- 316L

SST14VBA--- Stub End-- Type "A" for Slip on Flange, Machine Finish							
Tube OD (Size)	A	B	C	D	Weight	Part Number 316L	
1/2"	2.000	1.625	0.065	0.500	0.12	SST14VBA-0.50-316L	*NEW!*
3/4"	2.000	1.687	0.065	0.750	0.12	SST14VBA-0.75-316L	*NEW!*
1"	2.000	1.625	0.065	1.000	0.15	SST14VBA-1-316L	
1.5"	2.875	1.750	0.065	1.500	0.23	SST14VBA-1.5-316L	
2"	3.625	1.500	0.065	2.000	0.31	SST14VBA-2-316L	
2.5"	4.125	2.000	0.065	2.500	0.42	SST14VBA-2.5-316L	
3"	5.000	2.250	0.065	3.000	0.72	SST14VBA-3-316L	
4"	6.187	2.625	0.083	4.000	1.06	SST14VBA-4-316L	
6"	8.500	3.000	0.109	6.000	3.50	SST14VBA-6-316L	*NEW!*
8"	10.625	3.000	0.109	8.000	3.50	SST14VBA-8-316L	*NEW!*

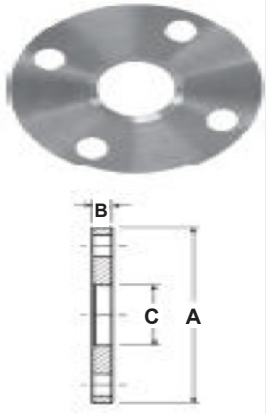

SS38SL-- Tube OD (150 lbs.) Slip on Flange, Machine Finish								
Tube OD (Size)	A	B	C	# & Dia. Bolt Holes	Weight	Part Number 304	Part Number 316L	
1/2"	3.500	0.375	0.563	4/.625	0.90	SS38SL-0.50-304	SS38SL-0.50-316L	*NEW!*
3/4"	3.875	0.375	0.813	4/.625	1.30	SS38SL-0.75-304	SS38SL-0.75-316L	*NEW!*
1"	4.250	0.375	1.063	4/.625	1.55	SS38SL-1-304	SS38SL-1-316L	
1.5"	5.000	0.375	1.563	4/.625	2.05	SS38SL-1.5-304	SS38SL-1.5-316L	
2"	6.000	0.437	2.063	4/.750	3.05	SS38SL-2-304	SS38SL-2-316L	
2.5"	7.000	0.437	2.563	4/.750	3.96	SS38SL-2.5-304	SS38SL-2.5-316L	
3"	7.500	0.500	3.063	4/.750	4.96	SS38SL-3-304	SS38SL-3-316L	
4"	9.000	0.562	4.063	8/.750	6.97	SS38SL-4-304	SS38SL-4-316L	
6"	11.00	0.562	6.063	8/.875	9.48	SS38SL-6-304	SS38SL-6-316L	*NEW!*
8"	13.50	0.687	8.063	8/.875	CALL	SS38SL-8-304	SS38SL-8-316L	*NEW!*

SS38W-- *Weld Neck* Flange, Machine Finish								
Tube OD (Size)	A	B	C	# & Dia. Bolt Holes	Weight	Part Number 304	Part Number 316L	
1"	1.000	0.375	4.250	4/.625	1.55	SS38W-1-304	SS38W-1-316L	*NEW!*
1.5"	1.500	0.375	5.000	4/.625	2.05	SS38W-1.5-304	SS38W-1.5-316L	*NEW!*
2"	2.000	0.500	6.000	4/.750	3.05	SS38W-2-304	SS38W-2-316L	*NEW!*
2.5"	2.500	0.500	7.000	4/.750	3.96	SS38W-2.5-304	SS38W-2.5-316L	*NEW!*
3"	3.000	0.500	7.500	4/.750	4.96	SS38W-3-304	SS38W-3-316L	*NEW!*
4"	4.000	0.500	9.000	8/.750	6.97	SS38W-4-304	SS38W-4-316L	*NEW!*
6"	6.000	0.500	11.00	8/.875	9.48	SS38W-6-304	SS38W-6-316L	*NEW!*

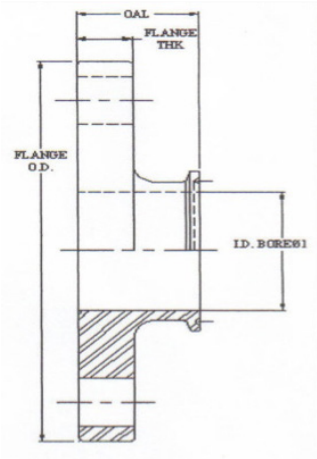

SS51-14MP--- Flange x Clamp Adapter, Machine Finish					
Tube OD (Size)	A	Weight	Part Number 304	Part Number 316L	
1/2"	1.625	CALL	SS51-14MP-0.50-304	SS51-14MP-0.50-316L	
3/4"	1.625	CALL	SS51-14MP-0.75-304	SS51-14MP-0.75-316L	
1"	1.625	3.20	SS51-14MP-1-304	SS51-14MP-1-316L	*NEW!*
1.5"	1.625	3.40	SS51-14MP-1.5-304	SS51-14MP-1.5-316L	*NEW!*
2"	1.750	5.10	SS51-14MP-2-304	SS51-14MP-2-316L	*NEW!*
2.5"	1.750	8.20	SS51-14MP-2.5-304	SS51-14MP-2.5-316L	*NEW!*
3"	1.750	10.0	SS51-14MP-3-304	SS51-14MP-3-316L	*NEW!*
4"	1.750	CALL	SS51-14MP-4-304	SS51-14MP-4-316L	*NEW!*
6"	2.125	CALL	SS51-14MP-6-304	SS51-14MP-6-316L	

SANITARY SOLUTIONS INC.

Bulldog Fittings/Valves...Bulldog Tough.

Sanitary Solutions I-Line Fittings

Sanitary Solutions I-Line various Fittings are:

I-Line Fittings Stocking Alloys: T304 or T316L

I-Line Fittings Sizes: 1” – 8” OD Tube

Note: OD Tube and Pipe Sizes do not interchange!

I-Line Fittings Sanitary Finish: 180 Grit Polish

A® 3 63-03

Sanitary Solutions Clamp Fittings Part Number Breakdown:

SS	Part Number	Size	Alloy
Sanitary Solutions	14WI	2”	304 or 316L
	I = I-Line		

www.sanitarysolutions.com

Sanitary Solutions Inc. 1-888-909-3569 or 1-855-640-7871

Prices are subject to change without notice; please call before you quote

SS2CI--- 90° Elbow with *Female I-Line Ferrules on Both Ends*, Polish ID/OD				
Tube OD (Size)	A	Weight	Part Number 304	Part Number 316L
1"	2.281	0.33	SS2CI-1-304	SS2CI-1-316L
1.5"	3.188	0.49	SS2CI-1.5-304	SS2CI-1.5-316L
2"	4.031	0.82	SS2CI-2-304	SS2CI-2-316L
2.5"	4.906	1.47	SS2CI-2.5-304	SS2CI-2.5-316L
3"	5.718	2.33	SS2CI-3-304	SS2CI-3-316L
4"	7.344	3.85	SS2CI-4-304	SS2CI-4-316L
6"	10.13	11.33	SS2CI-6-304	SS2CI-6-316L
8"	13.13	19.25	SS2CI-8-304	SS2CI-8-316L

SS2EI--- 90° Elbow with *Male I-Line Ferrules on Both Ends*, Polish ID/OD				
Tube OD (Size)	A	Weight	Part Number 304	Part Number 316L
1"	2.093	0.33	SS2EI-1-304	SS2EI-1-316L
1.5"	3.000	0.49	SS2EI-1.5-304	SS2EI-1.5-316L
2"	3.781	0.82	SS2EI-2-304	SS2EI-2-316L
2.5"	4.593	1.47	SS2EI-2.5-304	SS2EI-2.5-316L
3"	5.406	2.33	SS2EI-3-304	SS2EI-3-316L
4"	7.031	3.85	SS2EI-4-304	SS2EI-4-316L
6"	9.940	11.33	SS2EI-6-304	SS2EI-6-316L
8"	12.94	19.25	SS2EI-8-304	SS2EI-8-316L

SS2FI--- 90° Elbow with *Male I-Line x Female I-Line on Each End*, Polish ID/OD					
Tube OD (Size)	A	B	Weight	Part Number 304	Part Number 316L
1"	2.281	2.093	0.33	SS2FI-1-304	SS2FI-1-316L
1.5"	3.188	3.000	0.49	SS2FI-1.5-304	SS2FI-1.5-316L
2"	4.031	3.781	0.82	SS2FI-2-304	SS2FI-2-316L
2.5"	4.906	4.593	1.47	SS2FI-2.5-304	SS2FI-2.5-316L
3"	5.718	5.406	2.33	SS2FI-3-304	SS2FI-3-316L
4"	7.344	7.031	3.85	SS2FI-4-304	SS2FI-4-316L
6"	10.13	9.940	11.33	SS2FI-6-304	SS2FI-6-316L
8"	13.13	12.94	19.25	SS2FI-8-304	SS2FI-8-316L

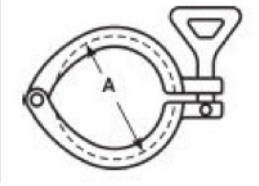

SS13ILCH---Heavy Weight *I-Line Wing Nut* Clamp, 304					
Tube OD (Size)	A	Weight	SPR @ 70° F *	SPR @ 250° F *	Part Number 304
1"-- 1.5"	2.122	0.75	700	250	SS13ILCH-1-1.5-304
2"	2.654	1.10	450	250	SS13ILCH-2-304
2.5"	3.185	1.20	450	200	SS13ILCH-2.5-304
3"	3.717	1.50	350	150	SS13ILCH-3-304
4"	4.820	1.60	200	125	SS13ILCH-4-304
** Tighten Wing Nut to 25 in. lb. of torque*					

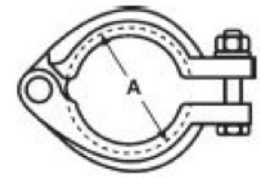

SS13ILBH---Heavy Weight *I-Line Bolted* Clamp, 304					
Tube OD (Size)	A	Weight	SPR @ 70° F *	SPR @ 250° F *	Part Number 304
1"-- 1.5"	2.122	1.20	1220	1100	SS13ILBH-1-1.5-304
2"	2.654	1.60	900	830	SS13ILBH-2-304
2.5"	3.185	2.20	720	660	SS13ILBH-2.5-304
3"	3.717	3.00	600	550	SS13ILBH-3-304
4"	4.820	4.25	570	525	SS13ILBH-4-304
** Tighten Nut to 20 ft. lbs. of torque*					

SS13ILBH---Heavy Weight *I-Line Bolted* Clamp, 304						
Tube OD (Size)	A	Weight	SPR @ 70° F *	SPR @ 250° F *	Part Number 304	
6"	7.695	5.50	300	200	SS13ILBH-6-304	*NEW!*
8"	9.695	6.00	250	150	SS13ILBH-8-304	*NEW!*
** Tighten Nut to 20 ft. lbs. of torque*						

SS14WI--- Male I-Line *Short* Weld Ferrule				
Tube OD (Size)	A	Weight	Part Number 304	Part Number 316L
1"	0.590	0.20	SSI4WI-1-304	SSI4WI-1-316L
1.5"	0.765	0.20	SSI4WI-1.5-304	SSI4WI-1.5-316L
2"	0.790	0.30	SSI4WI-2-304	SSI4WI-2-316L
2.5"	0.848	0.60	SSI4WI-2.5-304	SSI4WI-2.5-316L
3"	0.906	0.80	SSI4WI-3-304	SSI4WI-3-316L
4"	1.031	1.00	SSI4WI-4-304	SSI4WI-4-316L
6"	0.937	2.80	SSI4WI-6-304	SSI4WI-6-316L
8"	0.937	3.50	SSI4WI-8-304	SSI4WI-8-316L *NEW!*

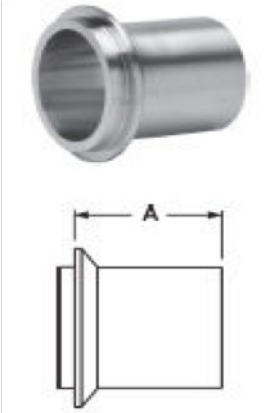

SS14WLI--- Male I-Line *Long* Weld Ferrule				
Tube OD (Size)	A	Weight	Part Number 304	Part Number 316L
1"	1.562	0.25	SSI4WLI-1-304	SSI4WLI-1-316L
1.5"	1.843	0.25	SSI4WLI-1.5-304	SSI4WLI-1.5-316L
2"	2.062	0.41	SSI4WLI-2-304	SSI4WLI-2-316L
2.5"	2.188	0.66	SSI4WLI-2.5-304	SSI4WLI-2.5-316L
3"	2.375	0.93	SSI4WLI-3-304	SSI4WLI-3-316L
4"	2.687	1.15	SSI4WLI-4-304	SSI4WLI-4-316L
6"	2.687	3.95	SSI4WLI-6-304	SSI4WLI-6-316L

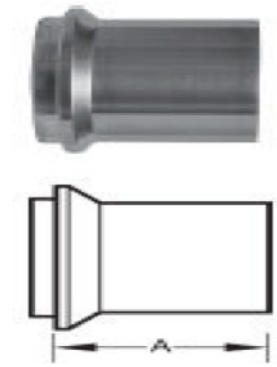

SS14WHI--- Male I-Line Heavy Wall Tank Ferrule				
Tube OD (Size)	A		Part Number 304	Part Number 316L
1"	1.312		SSI4WHI-1-304	SSI4WHI-1-316L
1.5"	1.452		SSI4WHI-1.5-304	SSI4WHI-1.5-316L
2"	1.500		SSI4WHI-2-304	SSI4WHI-2-316L
2.5"	1.437		SSI4WHI-2.5-304	SSI4WHI-2.5-316L
3"	1.500		SSI4WHI-3-304	SSI4WHI-3-316L
4"	1.812		SSI4WHI-4-304	SSI4WHI-4-316L

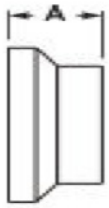

SS15WI--- *Female* I-Line *Short* Weld Ferrule

Tube OD (Size)	A	Weight	Part Number 304	Part Number 316L	
1"	0.784	0.20	SSI5WI-1-304	SSI5WI-1-316L	
1.5"	0.948	0.20	SSI5WI-1.5-304	SSI5WI-1.5-316L	
2"	1.036	0.30	SSI5WI-2-304	SSI5WI-2-316L	
2.5"	1.156	0.60	SSI5WI-2.5-304	SSI5WI-2.5-316L	
3"	1.218	0.80	SSI5WI-3-304	SSI5WI-3-316L	
4"	1.346	1.00	SSI5WI-4-304	SSI5WI-4-316L	
6"	1.125	2.80	SSI5WI-6-304	SSI5WI-6-316L	
8"	1.130	3.50	SSI5WI-8-304	SSI5WI-8-316L	*NEW!*

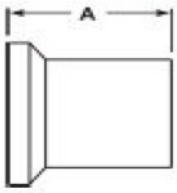

SS15WLI--- *Female* I-Line Long Weld Ferrule

Tube OD (Size)	A	Weight	Part Number 304	Part Number 316L
1"	1.750	0.25	SSI5WLI-1-304	SSI5WLI-1-316L
1.5"	2.032	0.25	SSI5WLI-1.5-304	SSI5WLI-1.5-316L
2"	2.312	0.41	SSI5WLI-2-304	SSI5WLI-2-316L
2.5"	2.500	0.66	SSI5WLI-2.5-304	SSI5WLI-2.5-316L
3"	2.687	0.93	SSI5WLI-3-304	SSI5WLI-3-316L
4"	3.000	1.15	SSI5WLI-4-304	SSI5WLI-4-316L
6"	3.000	3.95	SSI5WLI-6-304	SSI5WLI-6-316L

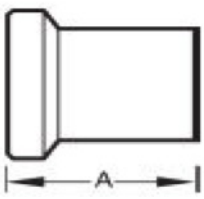

SS15WHI--- *Female* I-Line Heavy Wall Tank Ferrule

Tube OD (Size)	A		Part Number 304	Part Number 316L
1"	1.500		SSI5WHI-1-304	SSI5WHI-1-316L
1.5"	1.625		SSI5WHI-1.5-304	SSI5WHI-1.5-316L
2"	1.750		SSI5WHI-2-304	SSI5WHI-2-316L
2.5"	1.750		SSI5WHI-2.5-304	SSI5WHI-2.5-316L
3"	1.812		SSI5WHI-3-304	SSI5WHI-3-316L
4"	2.125		SSI5WHI-4-304	SSI5WHI-4-316L

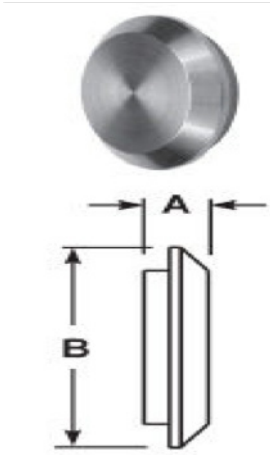

SS16AI-14I---Male I-Line Solid End Cap					
Tube OD (Size)	A	B	Weight	Part Number 304	Part Number 316L
1"	0.500	1.985	0.10	SS16AI-14I-1-304	SS16AI-14I-1-316L
1.5"	0.500	1.985	0.10	SS16AI-14I-1.5-304	SS16AI-14I-1.5-316L
2"	0.550	2.640	0.50	SS16AI-14I-2-304	SS16AI-14I-2-316L
2.5"	0.687	3.307	1.00	SS16AI-14I-2.5-304	SS16AI-14I-2.5-316L
3"	0.687	3.870	2.00	SS16AI-14I-3-304	SS16AI-14I-3-316L
4"	0.750	4.870	3.50	SS16AI-14I-4-304	SS16AI-14I-4-316L
6"	0.750	7.495	8.00	SS16AI-14I-6-304	SS16AI-14I-6-316L
8"	0.880	9.495	13.5	SS16AI-14I-8-304	SS16AI-14I-8-316L

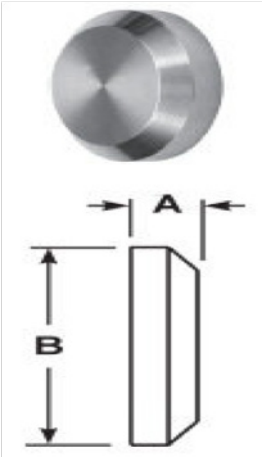

SS16AI-15I---*Female* I-Line Solid End Cap					
Tube OD (Size)	A	B	Weight	Part Number 304	Part Number 316L
1"	0.500	1.985	0.10	SS16AI-15I-1-304	SS16AI-15I-1-316L
1.5"	0.500	1.985	0.10	SS16AI-15I-1.5-304	SS16AI-15I-1.5-316L
2"	0.550	2.640	0.50	SS16AI-15I-2-304	SS16AI-15I-2-316L
2.5"	0.687	3.307	1.00	SS16AI-15I-2.5-304	SS16AI-15I-2.5-316L
3"	0.687	3.870	2.00	SS16AI-15I-3-304	SS16AI-15I-3-316L
4"	0.750	4.870	3.50	SS16AI-15I-4-304	SS16AI-15I-4-316L
6"	0.750	7.495	8.00	SS16AI-15I-6-304	SS16AI-15I-6-316L
8"	0.880	9.495	13.5	SS16AI-15I-8-304	SS16AI-15I-8-316L

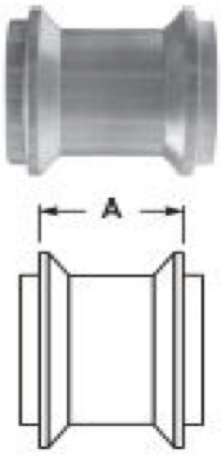

SS17I-14I-14I-*Male* I-Line Ferrule x *Male* I-Line Ferrule Adapter				
Tube OD (Size)	A		Part Number 304	Part Number 316L
1"	1.200		SS17I-14I-14I-1-304	SS17I-14I-14I-1-316L
1.5"	1.530		SS17I-14I-14I-1.5-304	SS17I-14I-14I-1.5-316L
2"	1.580		SS17I-14I-14I-2-304	SS17I-14I-14I-2-316L
2.5"	1.696		SS17I-14I-14I-2.5-304	SS17I-14I-14I-2.5-316L
3"	1.812		SS17I-14I-14I-3-304	SS17I-14I-14I-3-316L
4"	2.062		SS17I-14I-14I-4-304	SS17I-14I-14I-4-316L

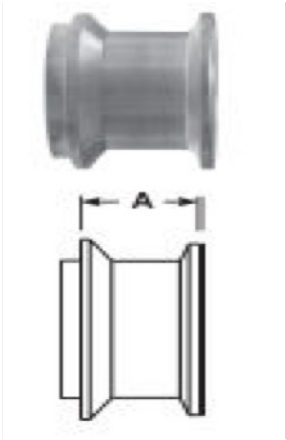

SS17I-14I-14MP-*Male* I-Line Ferrule x *Clamp* Adapter				
Tube OD (Size)	A		Part Number 304	Part Number 316L
1"	1.093		SS17I-14I-14MP-1-304	SS17I-14I-14MP-1-316L
1.5"	1.250		SS17I-14I-14MP-1.5-304	SS17I-14I-14MP-1.5-316L
2"	1.250		SS17I-14I-14MP-2-304	SS17I-14I-14MP-2-316L
2.5"	1.312		SS17I-14I-14MP-2.5-304	SS17I-14I-14MP-2.5-316L
3"	1.406		SS17I-14I-14MP-3-304	SS17I-14I-14MP-3-316L
4"	1.656		SS17I-14I-14MP-4-304	SS17I-14I-14MP-4-316L

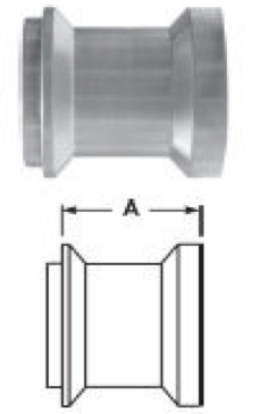

SS17I-14I-15I-*Male* I-Line Ferrule x *Female* I-Line Ferrule Adapter			
Tube OD (Size)	A	Part Number 304	Part Number 316L
1"	1.318	SS17I-14I-15I-1-304	SS17I-14I-15I-1-316L
1.5"	1.468	SS17I-14I-15I-1.5-304	SS17I-14I-15I-1.5-316L
2"	1.500	SS17I-14I-15I-2-304	SS17I-14I-15I-2-316L
2.5"	1.688	SS17I-14I-15I-2.5-304	SS17I-14I-15I-2.5-316L
3"	1.812	SS17I-14I-15I-3-304	SS17I-14I-15I-3-316L
4"	2.062	SS17I-14I-15I-4-304	SS17I-14I-15I-4-316L

SS17I-15I-14MP-*Female I*-Line Ferrule x *Clamp* Adapter			
Tube OD (Size)	A	Part Number 304	Part Number 316L
1"	1.281	SS17I-15I-14MP-1-304	SS17I-15I-14MP-1-316L
1.5"	1.437	SS17I-15I-14MP-1.5-304	SS17I-15I-14MP-1.5-316L
2"	1.540	SS17I-15I-14MP-2-304	SS17I-15I-14MP-2-316L
2.5"	1.625	SS17I-15I-14MP-2.5-304	SS17I-15I-14MP-2.5-316L
3"	1.718	SS17I-15I-14MP-3-304	SS17I-15I-14MP-3-316L
4"	1.968	SS17I-15I-14MP-4-304	SS17I-15I-14MP-4-316L

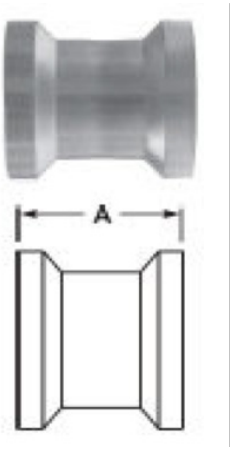

SS17I-15I-15I- *Female* I-Line Ferrule x *Female* I-Line Ferrule Adapter			
Tube OD (Size)	A	Part Number 304	Part Number 316L
1"	1.562	SS17I-15I-15I-1-304	SS17I-15I-15I-1-316L
1.5"	1.875	SS17I-15I-15I-1.5-304	SS17I-15I-15I-1.5-316L
2"	2.062	SS17I-15I-15I-2-304	SS17I-15I-15I-2-316L
2.5"	2.312	SS17I-15I-15I-2.5-304	SS17I-15I-15I-2.5-316L
3"	2.437	SS17I-15I-15I-3-304	SS17I-15I-15I-3-316L
4"	2.688	SS17I-15I-15I-4-304	SS17I-15I-15I-4-316L

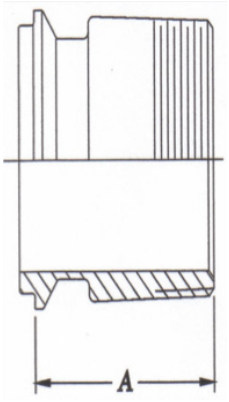

SS21I-14I-*Male* I-Line Ferrule x (MNPT) Adapter			
Tube OD (Size)	A	Part Number 304	Part Number 316L
1" x 1"	2.343	SS21I-14I-1-304	SS21I-14I-1-316L
1.5" x 1.5"	2.500	SS21I-14I-1.5-304	SS21I-14I-1.5-316L
2" x 2"	2.593	SS21I-14I-2-304	SS21I-14I-2-316L
2.5" x 2.5"	3.125	SS21I-14I-2.5-304	SS21I-14I-2.5-316L
3" x 3"	3.406	SS21I-14I-3-304	SS21I-14I-3-316L
4" x 4"	3.593	SS21I-14I-4-304	SS21I-14I-4-316L

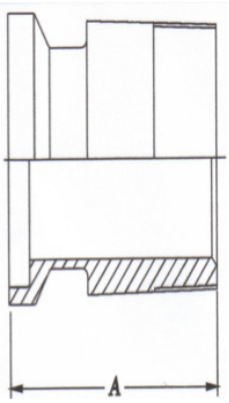

SS21I-15I- *Female* I-Line Ferrule x (MNPT) Adapter			
Tube OD (Size)	A	Part Number 304	Part Number 316L
1" x 1"	2.531	SS21I-15I-1-304	SS21I-15I-1-316L
1.5" x 1.5"	2.688	SS21I-15I-1.5-304	SS21I-15I-1.5-316L
2" x 2"	2.844	SS21I-15I-2-304	SS21I-15I-2-316L
2.5" x 2.5"	3.438	SS21I-15I-2.5-304	SS21I-15I-2.5-316L
3" x 3"	3.719	SS21I-15I-3-304	SS21I-15I-3-316L
4" x 4"	3.906	SS21I-15I-4-304	SS21I-15I-4-316L

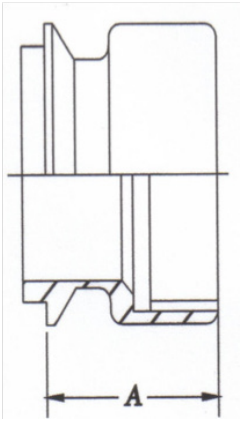

SS22I-14I-*Male* I-Line Ferrule x (FNPT) Adapter			
Tube OD (Size)	A	Part Number 304	Part Number 316L
1" x 1"	1.688	SS22I-14I-1-304	SS22I-14I-1-316L
1.5" x 1.5"	2.188	SS22I-14I-1.5-304	SS22I-14I-1.5-316L
2" x 2"	2.219	SS22I-14I-2-304	SS22I-14I-2-316L
2.5" x 2.5"	2.438	SS22I-14I-2.5-304	SS22I-14I-2.5-316L
3" x 3"	2.719	SS22I-14I-3-304	SS22I-14I-3-316L
4" x 4"	3.031	SS22I-14I-4-304	SS22I-14I-4-316L

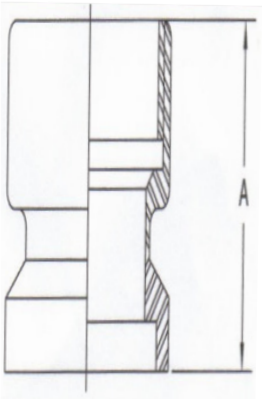

SS22I-15I- *Female* I-Line Ferrule x (FNPT) Adapter			
Tube OD (Size)	A	Part Number 304	Part Number 316L
1" x 1"	1.906	SS22I-15I-1-304	SS22I-15I-1-316L
1.5" x 1.5"	2.375	SS22I-15I-1.5-304	SS22I-15I-1.5-316L
2" x 2"	2.469	SS22I-15I-2-304	SS22I-15I-2-316L
2.5" x 2.5"	2.781	SS22I-15I-2.5-304	SS22I-15I-2.5-316L
3" x 3"	3.031	SS22I-15I-3-304	SS22I-15I-3-316L
4" x 4"	3.343	SS22I-15I-4-304	SS22I-15I-4-316L

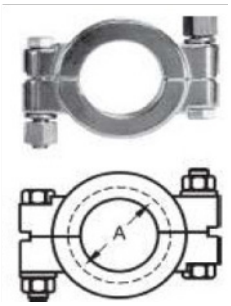

SS13ILBV---Schedule 5 I-Line Bolted Clamp, 304				
Pipe (Size)	A	Weight	Part Number 304	SPR @ 70° F *
3"	2.046	1.12	SS13ILBV-3-304	350
4"	2.578	1.42	SS13ILBV-4-304	300
6"	3.110	2.81	SS13ILBV-6-304	150
Note: 0.5"-2.5" use 1/2 size larger SS13MHP				

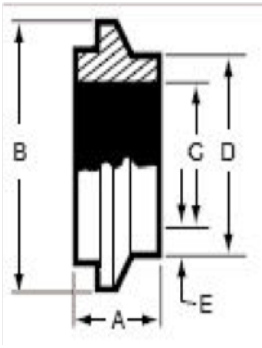

SS14WIV--- *Schedule 5 Pipe* Short Weld Male I-Line Ferrule							
Tube OD (Size)	A	B	C	D	Part Number 304	Part Number 316L	Weight
1"	0.945	2.000	1.185	1.315	SS14WIV-1-304	SS14WIV-1-316L	0.20
1.5"	1.024	2.648	1.770	1.900	SS14WIV-1.5-304	SS14WIV-1.5-316L	0.30
2"	1.142	3.317	2.245	2.375	SS14WIV-2-304	SS14WIV-2-316L	0.60
2.5"	1.220	3.868	2.709	2.875	SS14WIV-2.5-304	SS14WIV-2.5-316L	0.80
3"	1.317	4.303	3.334	3.500	SS14WIV-3-304	SS14WIV-3-316L	1.50
4"	1.348	5.302	4.334	4.500	SS14WIV-4-304	SS14WIV-4-316L	1.90
6"	1.005	6.904	6.407	6.625	SS14WIV-6-304	SS14WIV-6-316L	1.90

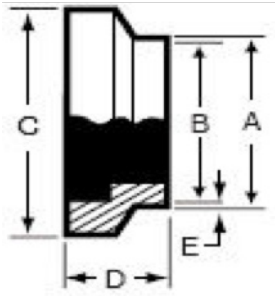

SS15WIV--- *Schedule 5 Pipe* Short Weld Female I-Line Ferrule							
Tube OD (Size)	A	B	C	D	Part Number 304	Part Number 316L	Weight
1"	1.315	1.185	2.000	0.945	SS15WIV-1-304	SS15WIV-1-316L	0.20
1.5"	1.900	1.770	2.648	1.024	SS15WIV-1.5-304	SS15WIV-1.5-316L	0.30
2"	2.375	2.245	3.317	1.142	SS15WIV-2-304	SS15WIV-2-316L	0.60
2.5"	2.875	2.709	3.868	1.220	SS15WIV-2.5-304	SS15WIV-2.5-316L	0.80
3"	3.500	3.334	4.303	1.317	SS15WIV-3-304	SS15WIV-3-316L	1.50
4"	4.500	4.334	5.302	1.348	SS15WIV-4-304	SS15WIV-4-316L	1.90
6"	6.625	6.407	6.904	1.005	SS15WIV-6-304	SS15WIV-6-316L	1.90

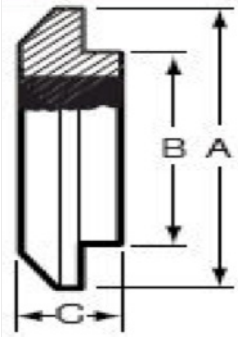

SS16AI-14IV-- Schedule 5 *Male I-Line End Cap*					
Tube OD (Size)	A	B	C	Part Number 304	Part Number 316L
1"	2.000	1.756	0.500	SS16AI-14IV-1-304	SS16AI-14IV-1-316L
1.5"	2.648	2.244	0.585	SS16AI-14IV-1.5-304	SS16AI-14IV-1.5-316L
2"	3.317	2.756	0.750	SS16AI-14IV-2-304	SS16AI-14IV-2-316L
2.5"	3.868	3.316	0.750	SS16AI-14IV-2.5-304	SS16AI-14IV-2.5-316L
3"	4.882	4.316	0.750	SS16AI-14IV-3-304	SS16AI-14IV-3-316L
4"	5.582	5.316	0.750	SS16AI-14IV-4-304	SS16AI-14IV-4-316L

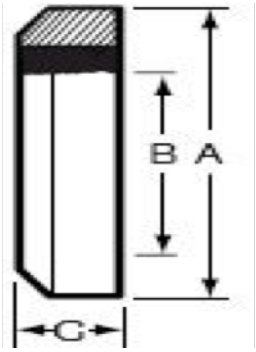

SS16AI-15IV-- Schedule 5 *Female I-Line End Cap*					
Tube OD (Size)	A	B	C	Part Number 304	Part Number 316L
1"	2.000	1.756	0.500	SS16AI-15IV-1-304	SS16AI-15IV-1-316L
1.5"	2.648	2.244	0.585	SS16AI-15IV-1.5-304	SS16AI-15IV-1.5-316L
2"	3.317	2.756	0.750	SS16AI-15IV-2-304	SS16AI-15IV-2-316L
2.5"	3.868	3.316	0.750	SS16AI-15IV-2.5-304	SS16AI-15IV-2.5-316L
3"	4.882	4.316	0.750	SS16AI-15IV-3-304	SS16AI-15IV-3-316L
4"	5.582	5.316	0.750	SS16AI-15IV-4-304	SS16AI-15IV-4-316L

Sanitary Solutions offers the following I-Line types:

SS2HI

SS2KI

SS2PI

SS7I

SS7AI

SS7BI

SS7EI

SS7HI

SS9I

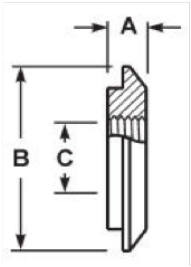

SS23BI

SS28YI-15I

SS3114I-14I

SS3114I-15I

SS3115I-14I

SS3115I-15I

SS3214I-14I

SS3214I-15I

SS3215I-14I

SS3215I-15I

www.sanitarysolutions.com

Sanitary Solutions Inc. 1-888-909-3569 or 1-855-640-7871

Prices are subject to change without notice; please call before you quote

SANITARY SOLUTIONS INC.

Bulldog Fittings/Valves...Bulldog Tough.

Sanitary Solutions Q-Line Fittings

Sanitary Solutions I-Line various Fittings are:

Q-Line Fittings Stocking Alloys: T304 or T316L

Q-Line Fittings Sizes: 1” – 8” OD Tube

Note: OD Tube and Pipe Sizes do not interchange!

Q-Line Fittings Sanitary Finish: 180 Grit Polish

Note: Q-Line Fittings are beefier for absorbing vibration

A3® 63-03

Sanitary Solutions Clamp Fittings Part Number Breakdown:

SS	Part Number	Size	Alloy
Sanitary Solutions	14WQ	2”	304 or 316L
	Q = Q-Line		

www.sanitarysolutions.com

Sanitary Solutions Inc. 1-888-909-3569 or 1-855-640-7871

Prices are subject to change without notice; please call before you quote

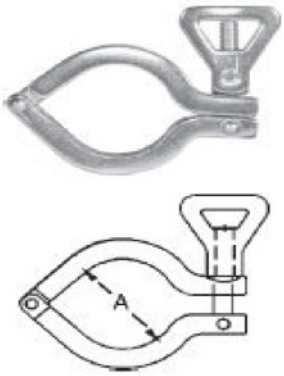

SS13IQ---Heavy Weight *Q-Line* Clamp, 304					
Tube OD (Size)	A	Weight	SPR @ 70° F *	SPR @ 250° F *	Part Number 304
1"-- 1.5"	2.122	0.72	700	250	SS13IQ-1-1.5-304
2"	2.654	0.83	450	250	SS13IQ-2-304
2.5"	3.185	1.05	450	200	SS13IQ-2.5-304
3"	3.717	1.22	350	150	SS13IQ-3-304
4"	4.820	2.72	200	125	SS13IQ-4-304
6"	7.689	3.33	150	100	SS13IQ-6-304
8"	9.689	5.25	125	75	SS13IQ-8-304
** Tighten Wing Nut to 25 in. lb. of torque*					

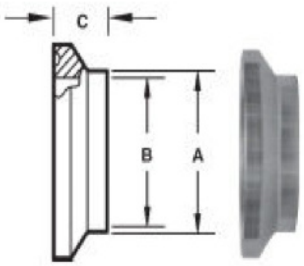

SS14WQ-- *Short* Weld Q-Line Tank Ferrule						
Tube OD (Size)	A	B	C	Weight	Part Number 304	Part Number 316L
1"	1.000	0.870	0.531	0.25	SS14WQ-1-304	SS14WQ-1-316L
1.5"	1.500	1.370	0.563	0.25	SS14WQ-1.5-304	SS14WQ-1.5-316L
2"	2.000	1.87	0.813	0.41	SS14WQ-2-304	SS14WQ-2-316L
2.5"	2.500	2.37	0.938	0.66	SS14WQ-2.5-304	SS14WQ-2.5-316L
3"	3.000	2.870	0.938	0.93	SS14WQ-3-304	SS14WQ-3-316L
4"	4.000	3.834	1.000	1.15	SS14WQ-4-304	SS14WQ-4-316L

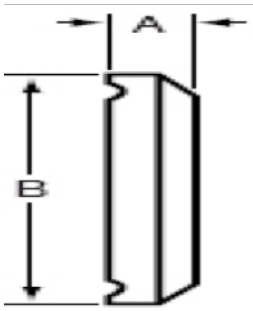

SS16AQ-14Q-- *Q-Line End Cap*				
Tube OD (Size)	A	B	Part Number 304	Part Number 316L
1"	0.312	2.000	SS16AQ-14Q-1-304	SS16AQ-14Q-1-316L
1.5"	0.312	2.000	SS16AQ-14Q-1.5-304	SS16AQ-14Q-1.5-316L
2"	0.437	2.648	SS16AQ-14Q-2-304	SS16AQ-14Q-2-316L
2.5"	0.500	3.313	SS16AQ-14Q-2.5-304	SS16AQ-14Q-2.5-316L
3"	0.500	3.870	SS16AQ-14Q-3-304	SS16AQ-14Q-3-316L
4"	0.625	4.870	SS16AQ-14Q-4-304	SS16AQ-14Q-4-316L

Sanitary Solutions offers the following I-Line types:

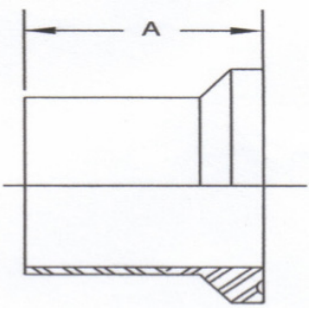

SS14WLQ

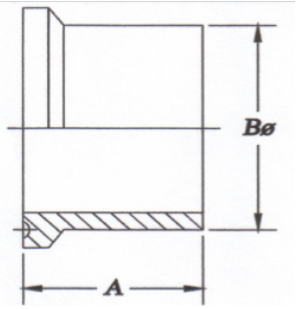

SS14WHQ

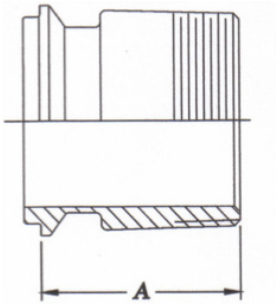

SS21Q

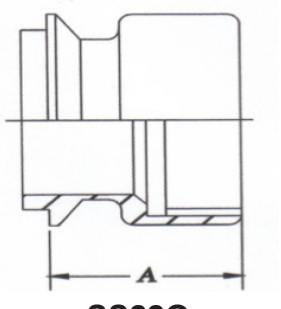

SS22Q

www.sanitarysolutions.com

Sanitary Solutions Inc. 1-888-909-3569 or 1-855-640-7871

Prices are subject to change without notice; please call before you quote

SANITARY SOLUTIONS INC.

Bulldog Fittings/Valves...Bulldog Tough.

Sanitary Solutions Schedule 5, 10, 40 Pipe to Tube Fittings

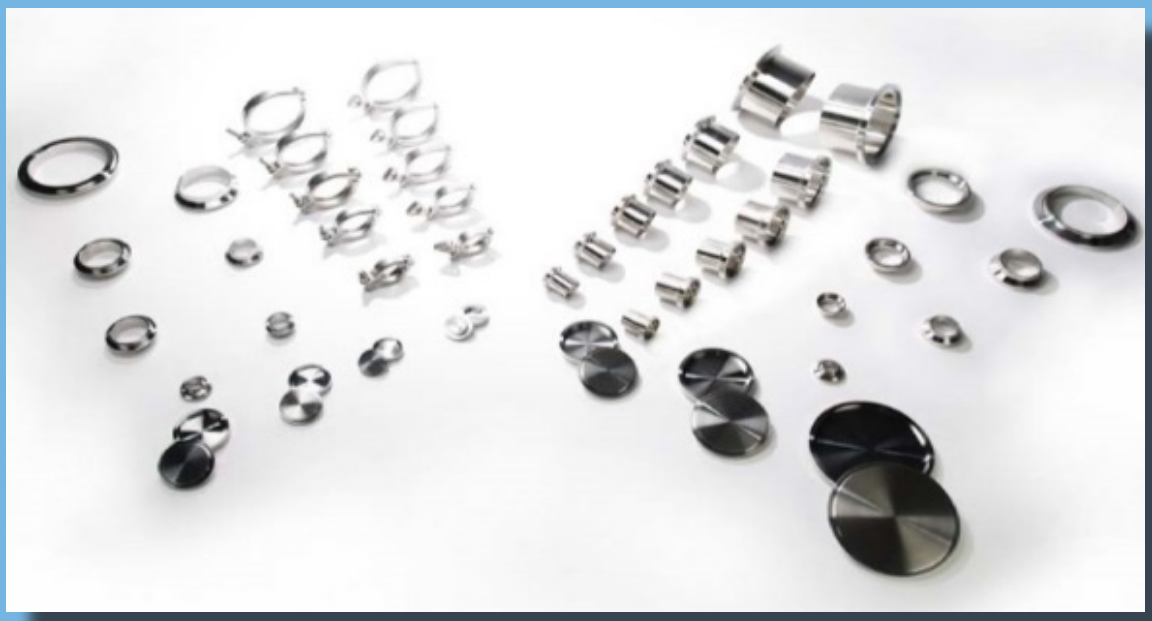

3A® 63-03

Sanitary Solutions Schedule 5, 10, 40 various Fittings are:
Sanitary Solutions Schedule 5, 10, 40 Fittings Stocking Alloys: T304 or T316L
Sanitary Solutions Schedule 5, 10, 40 Fittings Sizes: 1" – 8" OD Tube x Pipe
Note: OD Tube and Pipe Sizes do not interchange!

Schedule 5 x Tube OD Fittings Part Number Breakdown:

SS	Part Number	Size	Alloy
Sanitary Solutions	14WMV V = Schedule 5 Pipe	2"	304 or 316L

Schedule 10 x Tube OD Fittings Part Number Breakdown:

SS	Part Number	Size	Alloy
Sanitary Solutions	14WMX X = Schedule 10 Pipe	2"	304 or 316L

Schedule 40 x Tube OD Fittings Part Number Breakdown:

SS	Part Number	Size	Alloy
Sanitary Solutions	14WMZ Z = Schedule 40 Pipe	2"	304 or 316L

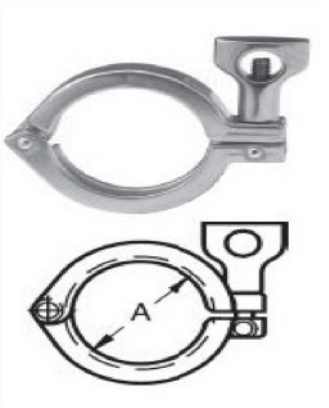

SS13MHMV---Schedule 5 Heavy Duty *Single* Pin Clamp, 304				
Pipe (Size)	A	Part Number 304	Weight	SPR @ 70° F *
1"	2.122	SS13MHMV-1-304	0.72	500
1.5"	2.654	SS13MHMV-1.5-304	0.72	450
2"	3.185	SS13MHMV-2-304	0.83	400
2.5"	3.717	SS13MHMV-2.5-304	1.05	350
3"	4.263	SS13MHMV-3-304	1.22	250
4"	5.263	SS13MHMV-4-304	2.72	150
6"	7.700	SS13MHMV-6-304	3.33	100
8"	9.865	SS13MHMV-8-304	5.25	100
** Tighten Wing Nut to 25 in. lb. of torque*				

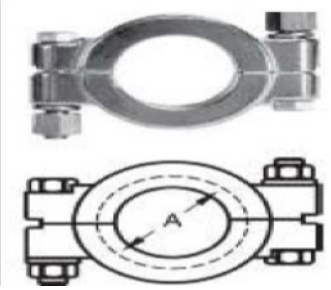

SS13MHPV---Schedule 5 Heavy Duty Bolted Clamp, 304				
Pipe (Size)	A	Part Number 304	Weight	SPR @ 70° F *
1"	2.046	SS13MHPV-1-304	0.86	750
1.5"	2.578	SS13MHPV-1.5-304	0.86	500
2"	3.110	SS13MHPV-2-304	0.97	500
2.5"	3.460	SS13MHPV-2.5-304	1.12	500
** Tighten Bronze Nut to 20 Ft. lb. of torque*				

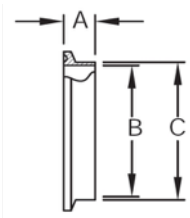

SS14WMV--- *Schedule 5* Pipe Short Weld Ferrule					
Pipe (Size)	A	B ID	C OD	Weight	Part Number 316L
1"	0.500	1.315	1.185	0.22	SS14WMV-1-316L
1.5"	0.500	1.900	1.770	0.22	SS14WMV-1.5-316L
2"	0.500	2.375	2.245	0.26	SS14WMV-2-316L
2.5"	0.500	2.875	2.709	0.33	SS14WMV-2.5-316L
3"	0.500	3.500	3.334	0.57	SS14WMV-3-316L
4"	0.625	4.500	4.334	0.42	SS14WMV-4-316L
6"	0.875	6.625	6.407	1.25	SS14WMV-6-316L ***NEW!***
8"	0.875	8.407	8.625	2.00	SS14WMV-8-316L ***NEW!***

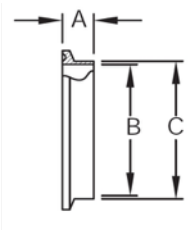

SS14WMX--- *Schedule 10 Pipe* Short Weld Ferrule						
Pipe (Size)	A	B	C	Weight	Part Number 316L	
1"	0.500	1.315	1.097	0.22	SS14WMX-1-316L	
1.5"	0.500	1.900	1.682	0.22	SS14WMX-1.5-316L	
2"	0.500	2.375	2.157	0.26	SS14WMX-2-316L	
2.5"	0.500	2.875	2.635	0.33	SS14WMX-2.5-316L	
3"	0.500	3.500	3.260	0.57	SS14WMX-3-316L	
4"	0.625	4.500	4.260	0.42	SS14WMX-4-316L	
6"	0.875	6.625	6.357	1.25	SS14WMX-6-316L	*NEW!*
8"	0.875	8.625	8.329	2.00	SS14WMX-8-316L	*NEW!*

SSL14AM7V--- *Schedule 5 Pipe* Long Weld Ferrule					
Pipe (Size)	A	B	C	Weight	Part Number 316L
1"	1.125	1.185	1.315	0.22	SSL14AM7V-1-316L
1.5"	1.125	1.770	1.900	0.22	SSL14AM7V-1.5-316L
2"	1.125	2.245	2.375	0.26	SSL14AM7V-2-316L
2.5"	1.125	2.709	2.875	0.33	SSL14AM7V-2.5-316L
3"	1.125	3.334	3.500	0.57	SSL14AM7V-3-316L
4"	1.125	4.334	4.500	0.42	SSL14AM7V-4-316L
6"	1.500	6.407	6.625	1.25	SSL14AM7V-6-316L

SSL14AM7X--- *Schedule 10 Pipe* Long Weld Ferrule					
Pipe (Size)	A	B	C	Weight	Part Number 316L
1"	1.125	1.097	1.315	0.28	SSL14AM7X-1-316L
1.5"	1.125	1.682	1.900	0.30	SSL14AM7X-1.5-316L
2"	1.125	2.157	2.375	0.35	SSL14AM7X-2-316L
2.5"	1.125	2.635	2.875	0.40	SSL14AM7X-2.5-316L
3"	1.125	3.260	3.500	0.50	SSL14AM7X-3-316L
4"	1.125	4.260	4.500	0.65	SSL14AM7X-4-316L
6"	1.500	6.357	6.625	1.55	SSL14AM7X-6-316L *NEW!*

SS16AMV-- *Schedule 5 Pipe* End Cap				
Pipe (Size)	A	B	Weight	Part Number 316L
1"	0.250	1.984	0.31	SS16AMV-1-316L
1.5"	0.250	2.516	0.31	SS16AMV-1.5-316L
2"	0.250	3.047	0.44	SS16AMV-2-316L
2.5"	0.250	3.579	0.90	SS16AMV-2.5-316L
3"	0.313	4.125	1.25	SS16AMV-3-316L
4"	0.313	5.125	1.85	SS16AMV-4-316L
6"	0.437	7.195	3.95	SS16AMV-6-316L
8"	0.437	9.200	7.06	SS16AMV-8-316L *NEW!*
10"	0.500	11.32	10.0	SS16AMV-10-316L

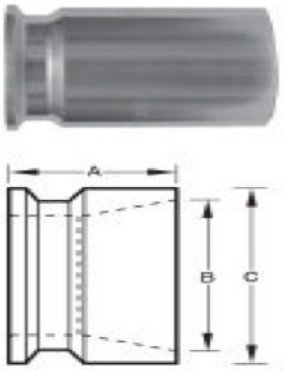

SS19MPV--- Clamp x *Schedule 5 Pipe* Buttweld Adapter					
Pipe (Size)	A	B	C	Wall Thickness	Part Number 316L
1/2"	1.125	0.710	0.840	0.065	SS19MPV-0.50-316L
3/4"	1.125	0.920	1.050	0.065	SS19MPV-0.75-316L
1"	1.125	1.185	1.315	0.065	SS19MPV-1-316L
1.5"	1.125	1.770	1.900	0.065	SS19MPV-1.5-316L
2"	1.125	2.245	2.375	0.065	SS19MPV-2-316L
2.5"	1.125	2.709	2.875	0.083	SS19MPV-2.5-316L
3"	1.125	3.334	3.500	0.083	SS19MPV-3-316L
4"	1.125	4.334	4.500	0.109	SS19MPV-4-316L
6"	1.125	6.407	6.625	0.109	SS19MPV-6-316L

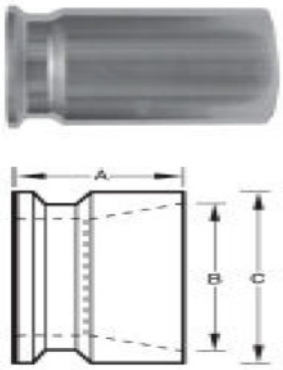

SS19MPX--- Clamp x *Schedule 10 Pipe* Buttweld Adapter						
Pipe (Size)	A	B	C	Wall Thickness	Part Number 316L	Weight
1/2"	1.125	0.674	0.840	0.083	SS19MPX-0.50-316L	0.10 *NEW!*
3/4"	1.125	0.884	1.050	0.083	SS19MPX-0.75-316L	0.20 *NEW!*
1"	1.125	1.097	1.315	0.109	SS19MPX-1-316L	0.20
1.5"	1.125	1.682	1.900	0.109	SS19MPX-1.5-316L	0.30
2"	1.125	2.157	2.375	0.109	SS19MPX-2-316L	0.40
2.5"	1.125	2.635	2.875	0.109	SS19MPX-2.5-316L	0.50
3"	1.125	3.260	3.500	0.109	SS19MPX-3-316L	0.50
4"	1.125	4.260	4.500	0.120	SS19MPX-4-316L	1.00
6"	1.125	6.357	6.625	0.134	SS19MPX-6-316L	2.50 *NEW!*

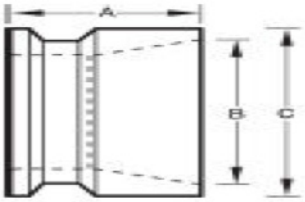

SS19MPZ--- Clamp x *Schedule 40 Pipe* Buttweld Adapter

Pipe (Size)	A	B	C	Wall Thickness	Part Number 316L	Weight
1/2"	1.125	0.622	0.840	0.109	SS19MPZ-0.50-316L	0.15
3/4"	1.125	0.824	1.050	0.113	SS19MPZ-0.75-316L	0.27
1"	1.125	1.049	1.315	0.133	SS19MPZ-1-316L	0.27 *NEW!*
1.5"	1.125	1.610	1.900	0.145	SS19MPZ-1.5-316L	0.38 *NEW!*
2"	1.125	2.067	2.375	0.154	SS19MPZ-2-316L	0.48 *NEW!*
2.5"	1.125	2.469	2.875	0.203	SS19MPZ-2.5-316L	0.60 *NEW!*
3"	1.125	3.068	3.500	0.216	SS19MPZ-3-316L	0.67 *NEW!*
4"	1.125	4.026	4.500	0.237	SS19MPZ-4-316L	1.25 *NEW!*
6"	1.125	6.065	6.625	0.280	SS19MPZ-6-316L	3.00 *NEW!*

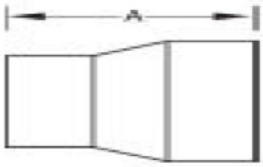

SS19WV--- Tube OD Buttweld x Schedule 5 Pipe Buttweld Adapter

Pipe (Size)	A	Tube OD	Tube Wall Thickness	Pipe ID	Part Number 316L
1"	1.500	1.000	0.065	1.185	SS19WV-1-316L
1.5"	1.500	1.500	0.065	1.770	SS19WV-1.5-316L
2"	2.500	2.000	0.065	2.250	SS19WV-2-3016L
2.5"	3.000	2.500	0.083	2.700	SS19WV-2.5-316L
3"	3.000	3.000	0.083	3.334	SS19WV-3-316L
4"	4.000	4.000	0.109	4.334	SS19WV-4-316L
6"	6.000	6.000	0.109	6.407	SS19WV-6-316L

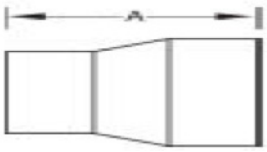

SS19WX--- Tube OD Buttweld x *Schedule 10* Pipe Buttweld Adapter

Pipe (Size)	A	Tube	Tube Wall Thickness	Pipe Wall Thickness	Part Number 316L	Weight
1/2"	1.00	0.50	0.065	0.083	SS19WX-0.5-316L	0.02 *NEW!*
3/4"	1.00	0.75	0.065	0.083	SS19WX-0.75-316L	0.06 *NEW!*
1"	2.00	1.000	0.065	0.109	SS19WX-1-316L	0.10 *NEW!*
1.5"	2.50	1.500	0.065	0.109	SS19WX-1.5-316L	0.10 *NEW!*
2"	2.50	2.000	0.065	0.109	SS19WX-2-316L	0.50 *NEW!*
2.5"	2.50	2.500	0.083	0.120	SS19WX-2.5-316L	0.50 *NEW!*
3"	2.50	3.000	0.083	0.120	SS19WX-3-316L	0.50 *NEW!*
4"	3.00	4.000	0.109	0.120	SS19WX-4-316L	1.35 *NEW!*
6"	3.00	6.000	0.109	0.134	SS19WX-6-316L	1.50 *NEW!*
8"	3.00	8.000	0.120	0.148	SS19WX-8-316L	2.10 *NEW!*

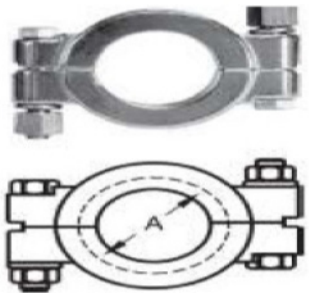

SS13ILBV---Schedule 5 I-Line Bolted Clamp, 304				
Pipe (Size)	A	Weight	Part Number 304	SPR @ 70° F *
3"	2.046	1.12	SS13ILBV-3-304	350
4"	2.578	1.42	SS13ILBV-4-304	300
6"	3.110	2.81	SS13ILBV-6-304	150
Note: 0.5"-2.5" use 1/2 size larger SS13MHP				

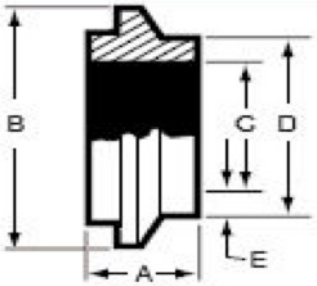

SS14WIV--- *Schedule 5 Pipe* Short Weld *Male I-Line* Ferrule						
Pipe (Size)	A	B	C	D	Part Number 316L	Weight
1"	0.786	1.997	1.185	1.315	SS14WIV-1-316L	0.20
1.5"	0.942	2.642	1.770	1.900	SS14WIV-1.5-316L	0.30
2"	1.130	3.309	2.245	2.375	SS14WIV-2-316L	0.60
2.5"	1.161	3.872	2.709	2.875	SS14WIV-2.5-316L	0.80
3"	1.317	4.872	3.334	3.500	SS14WIV-3-316L	1.50
4"	1.348	5.872	4.334	4.500	SS14WIV-4-316L	1.90
6"	1.005	7.497	6.407	6.625	SS14WIV-6-316L	1.90

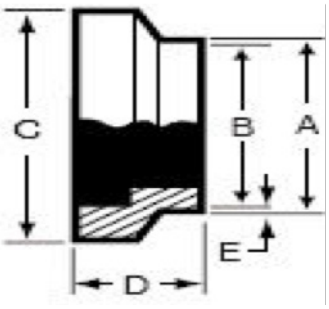

SS15WIV--- *Schedule 5 Pipe* Short Weld *Female I-Line* Ferrule						
Pipe (Size)	A	B	C	D	Part Number 316L	Weight
1"	1.315	1.185	1.997	0.945	SS15WIV-1-316L	0.20
1.5"	1.900	1.770	2.642	1.024	SS15WIV-1.5-316L	0.30
2"	2.375	2.245	3.309	1.142	SS15WIV-2-316L	0.60
2.5"	2.875	2.709	3.872	1.220	SS15WIV-2.5-316L	0.80
3"	3.500	3.334	4.872	1.343	SS15WIV-3-316L	1.50
4"	4.500	4.334	5.872	1.343	SS15WIV-4-316L	1.90
6"	6.625	6.407	7.497	1.343	SS15WIV-6-316L	1.90

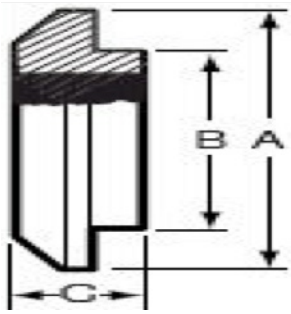

SS16AI-14IV-- *Schedule 5 Pipe Male I-Line End Cap*					
Pipe (Size)	A	B	C	Part Number 304	Part Number 316L
1"	2.000	1.756	0.500	SS16AI-14IV-1-304	SS16AI-14IV-1-316L
1.5"	2.648	2.244	0.585	SS16AI-14IV-1.5-304	SS16AI-14IV-1.5-316L
2"	3.317	2.756	0.750	SS16AI-14IV-2-304	SS16AI-14IV-2-316L
2.5"	3.868	3.316	0.750	SS16AI-14IV-2.5-304	SS16AI-14IV-2.5-316L
3"	4.882	4.316	0.750	SS16AI-14IV-3-304	SS16AI-14IV-3-316L
4"	5.582	5.316	0.750	SS16AI-14IV-4-304	SS16AI-14IV-4-316L

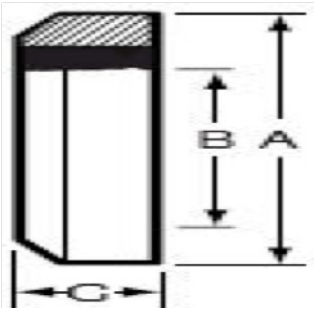

SS16AI-15IV-- *Schedule 5 Pipe Female I-Line End Cap*					
Pipe (Size)	A	B	C	Part Number 304	Part Number 316L
1"	2.000	1.756	0.500	SS16AI-15IV-1-304	SS16AI-15IV-1-316L
1.5"	2.648	2.244	0.585	SS16AI-15IV-1.5-304	SS16AI-15IV-1.5-316L
2"	3.317	2.756	0.750	SS16AI-15IV-2-304	SS16AI-15IV-2-316L
2.5"	3.868	3.316	0.750	SS16AI-15IV-2.5-304	SS16AI-15IV-2.5-316L
3"	4.882	4.316	0.750	SS16AI-15IV-3-304	SS16AI-15IV-3-316L
4"	5.582	5.316	0.750	SS16AI-15IV-4-304	SS16AI-15IV-4-316L

SANITARY SOLUTIONS INC.

Bulldog Fittings/Valves...Bulldog Tough.

Sanitary A270 Polish ID/OD Tube

A3 33-03

Sanitary Solutions Polish ID/OD A270 Tube is:
Polish ID/OD A270 Tube Stocking Alloys: T304 or T316L
Polish ID/OD A270 Tube Sizes: ½" – 12" OD Tube
Polish ID/OD A270 Tube Wall Thickness: 0.065—0.120
Note: OD Tube and Pipe Sizes do not interchange!
Polish ID/OD A270 Tube Sanitary Finish: 20 Ra ID/32 Ra OD

Sanitary Solutions Polish ID/OD A270 Part Number Breakdown:

Part Number	Size	Alloy
PT7 7 = Polish OD/OD	2"	304 or 316L

Notice: Sanitary Solutions will not cover Fuel Freight Charges
Sanitary Solutions supplies only 20' Lengths
Tubing ships only via Truck
Broken box charge for all less than freight allowed orders

www.sanitarysolutions.com

Sanitary Solutions Inc. 1-888-909-3569 or 1-855-640-7871

Prices are subject to change without notice; please call before you quote

Inspection and Tests

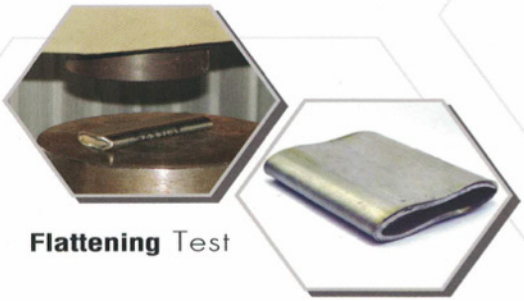

Flattening Test

Flange Test (90°) **Flaring** Test (60°)

Hardness Test

Tensile & Elongation Test

Metallurgical Microscope

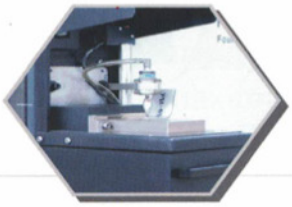

Spectrometer : Analyses the chemical compositions of stainless steel products.

Hydrostatic & Pneumatic Pressure Test :
Each length of finished pipe is subjected to the hydrostatic or pneumatic pressure test. Each pipe must withstand the pressure without leakage.

SANITARY SOLUTIONS INC.

Bulldog Fittings/Valves...Bulldog Tough.

Sanitary Solutions Tube/Pipe Hangers

Sanitary Solutions stocks and supplies a full line of Tube or Pipe hangers and Wall Flanges when tube support or wall flanges is your need.

Sanitary Solutions stocks ½" – 10" T304 Tube Hangers with Nitrile Grommets or ½"—10" Tube hangers with PVC Sleeves in our warehouses.

We have access to and can ship Hex Hangers with either Pipe or Rod Couplings, High Temperature (325°F) Tube Size or Pipe Size Hex Hangers, Alcryn (Temperature range 40°F -- 250°F) or Viton®(Temperature Range 75°F-- 390°F) and replacement sleeves and grommets.

We have access to ½" – 12" SS U-Bolt Hangers in either Tube or Pipe Size and SS WALL FLANGES, T304, (16 Gauge) from ½"—12" in either Tube or Pipe Size!

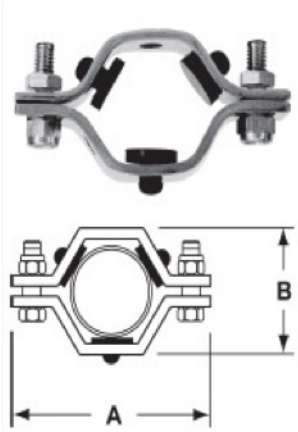

SSTHG-- SS Tube (Hex) Hanger with Rubber Grommets					
Tube OD (Size)	A	B	Weight	Part Number 304 SS	
1/2"	3.625	2.125	0.30	STHG-0.50-304	
3/4"	3.625	2.125	0.35	SSTHG-0.75-304	
1"	3.625	2.125	0.40	SSTHG-1-304	
1.5"	3.625	2.125	0.45	SSTHG-1.5-304	
2"	4.313	2.625	0.45	SSTHG-2-304	
2.5"	4.875	3.125	0.50	SSTHG-2.5-304	
3"	5.375	3.625	0.60	SSTHG-3-304	
4"	6.563	4.750	0.70	SSTHG-4-304	
5"	8.000	5.625	0.90	SSTHG-5-304	
6"	9.000	6.625	1.10	SSTHG-6-304	
8"	11.50	8.625	1.40	SSTHG-8-304	
10"	14.50	10.50	5.40	SSTHG-10-304	*NEW!*
12"	16.75	12.63	6.30	SSTHG-12-304	

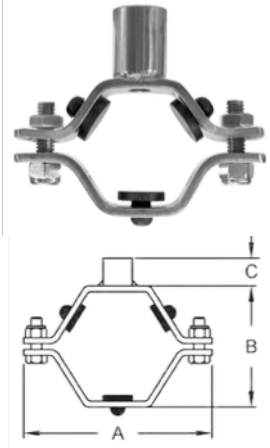

SSTHGRC--SS Tube (Hex) Hanger w/ Rubber Grommets 3/8"-- NPT Thread Coupler					
Tube OD (Size)	A	B	C	Part Number 304 SS	
1/2"-3/4'	3.425	1.450	0.750	SSTHGRC-1/2-3/4-304	
1"	3.425	1.450	0.750	SSTHGRC-1-304	
1.5"	4.000	2.125	0.750	SSTHGRC-1.5-304	
2"	4.500	2.500	0.750	SSTHGRC-2-304	
2.5"	4.750	3.125	0.750	SSTHGRC-2.5-304	
3"	5.500	3.750	0.750	SSTHGRC-3-304	
4"	6.750	4.750	0.750	SSTHGRC-4-304	
6"	9.250	6.625	0.750	SSTHGRC-6-304	*NEW!*
8"	11.50	8.625	0.750	SSTHGRC-8-304	

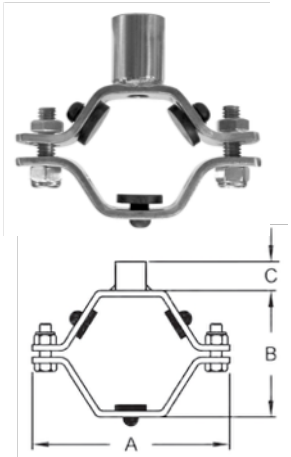

SSTHGRC--SS Tube (Hex) Hanger w/ Rubber Grommets 3/8-16 -- Pipe Thread Coupler					
Tube OD (Size)	A	B	C	Part Number 304 SS	
1/2"-3/4'	3.425	1.450	0.750	SSTHGRC-0.50-0.75-304	*NEW!*
1"	3.425	1.450	0.750	SSTHGRC-1-304	*NEW!*
1.5"	4.000	2.125	0.750	SSTHGRC-1.5-304	*NEW!*
2"	4.500	2.500	0.750	SSTHGRC-2-304	*NEW!*
2.5"	4.750	3.125	0.750	SSTHGRC-2.5-304	*NEW!*
3"	5.500	3.750	0.750	SSTHGRC-3-304	*NEW!*
4"	6.750	4.750	0.750	SSTHGRC-4-304	*NEW!*
6"	9.250	6.625	0.750	SSTHGRC-6-304	*NEW!*
8"	11.50	8.625	0.750	SSTHGRC-8-304	*NEW!*

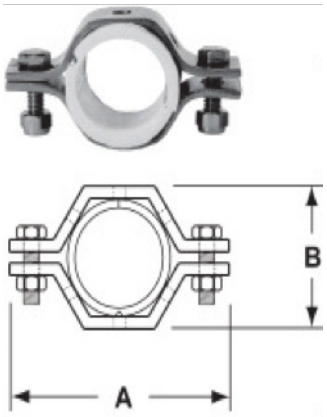

SSTHP-- SS Tube (Hex) Hanger with PVC Sleeve

Tube OD (Size)	A	B	Weight	Part Number 304 SS
1/2"	2.800	1.167	0.30	SSTHP-0.50-304
3/4"	2.800	1.320	0.30	SSTHP-0.75-304
1"	3.425	1.563	0.30	SSTHP-1-304
1.5"	4.000	2.125	0.40	SSTHP-1.5-304
2"	4.500	2.625	0.40	SSTHP-2-304
2.5"	4.950	3.125	0.60	SSTHP-2.5-304
3"	5.500	3.625	0.70	SSTHP-3-304
4"	6.950	4.625	0.80	SSTHP-4-304
5"	8.063	5.625	0.90	SSTHP-5-304
6"	9.250	6.813	1.20	SSTHP-6-304
8"	11.50	8.625	1.60	SSTHP-8-304
10"	14.50	10.50	5.80	SSTHP-10-304 *NEW!*
12"	16.62	13.00	7.30	SSTHP-12-304

SSPVC-- PVC Sleeve

Tube OD (Size)	Part Number 304 SS
1/2"	SSPVC-0.50-304
3/4"	SSPVC-0.75-304
1"	SSPVC-1-304
1.5"	SSPVC-1.5-304
2"	SSPVC-2-304
2.5"	SSPVC-2.5-304
3"	SSPVC-3-304
4"	SSPVC-4-304
5"	SSPVC-5-304
6"	SSPVC-6-304

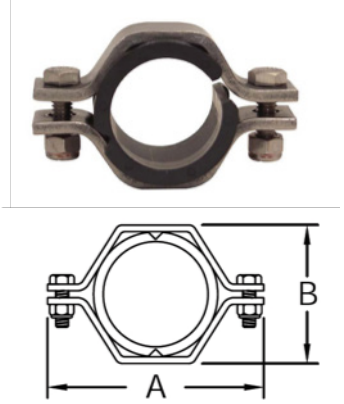

SSTHPHTS-- SS Tube (Hex) Hanger w/ High Temperature Sleeve

Tube OD (Size)	A	B	Weight	Part Number 304 SS
1/2"	2.800	1.167	0.30	STHPHTS-0.50-304
3/4"	2.800	1.320	0.30	SSTHPHTS-0.75-304
1"	3.425	1.563	0.30	SSTHPHTS-1-304
1.5"	4.000	2.125	0.40	SSTHPHTS-1.5-304
2"	4.500	2.625	0.40	SSTHPHTS-2-304
2.5"	4.950	3.125	0.60	SSTHPHTS-2.5-304
3"	5.500	3.625	0.70	SSTHPHTS-3-304
4"	6.950	4.625	0.80	SSTHPHTS-4-304
5"	8.063	5.625	0.90	SSTHPHTS-5-304
6"	9.250	6.813	1.20	SSTHPHTS-6-304

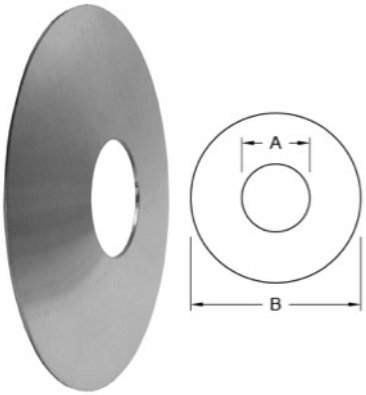

SSWFT-- Tube Wall Flanges

Tube OD (Size)	A	B	Weight	Nominal Wall	Part Number 304 SS	
1/2"	0.50	3.00	0.14	0.065	SSWFT-0.50x3-304	NEW!
1/2"	0.50	5.00	0.14	0.065	SSWFT-0.50-304	NEW!
3/4"	0.75	3.00	0.16	0.065	SSWFT-0.75x3-304	NEW!
3/4"	0.75	5.00	0.16	0.065	SSWFT-0.75-304	NEW!
1"	1.00	3.00	1.80	0.065	SSWFT-1-304	NEW!
1"	1.00	5.00	1.80	0.065	SSWFT-1x3-304	NEW!
1.5"	1.50	5.00	0.20	0.065	SSWFT-1.5-304	NEW!
2"	2.00	5.00	0.24	0.065	SSWFT-2-304	NEW!
2.5"	2.50	5.00	0.28	0.065	SSWFT-2.5-304	NEW!
3"	3.00	6.00	0.34	0.065	SSWFT-3-304	NEW!
4"	4.00	7.00	0.40	0.065	SSWFT-4-304	NEW!
5"	5.00	8.00	0.55	0.065	SSWFT-5-304	NEW!
6"	6.00	10.00	0.75	0.065	SSWFT-6-304	NEW!
8"	8.00	12.00	0.90	0.065	SSWFT-8-304	NEW!
10"	10.00	14.00	1.10	0.065	SSWFT-10-304	NEW!
12"	12.00	16.00	1.30	0.065	SSWFT-12-304	NEW!
Also Available in Pipe Size						

SSUT-- Tube Size U-Bolt Hanger

Tube OD (Size)	Plate Size	Rod Size	Weight	Part Number U-bolt only	
1/2"	3/16 x 3/4 x 1 7/8	1/4" x 3 7/8	0.11	SSUT-0.50-304	NEW!
3/4"	3/16 x 3/4 x 1 7/8	1/4" x 3 7/8	0.13	SSUT-0.75-304	NEW!
1"	3/16 x 3/4 x 2 1/8	1/4" x 4 3/8	0.16	SSUT-1-304	NEW!
1.5"	1/4" x 1" x 2 1/8"	5/16"	0.18	SSUT-1.5-304	NEW!
2"	1/4" x 1" x 3 3/8"	5/16"	0.20	SSUT-2-304	NEW!
2.5"	1/4" x 1" x 3 3/8"	5/16"	0.24	SSUT-2.5-304	NEW!
3"	1/4" x 1" x 4 3/8"	5/16"	0.27	SSUT-3-304	NEW!
4"	1/4" x 1" x 5 1/4"	5/16"	0.30	SSUT-4-304	NEW!
5"	1/4" x 1 1/4" x 6 1/2"	3/8"	1.45	SSUT-5-304	NEW!
6"	1/4" x 1 1/4" x 6 1/2"	3/8"	1.70	SSUT-6-304	NEW!
8"	3/8" x 1 1/2" x 9 1/2"	3/8"	2.00	SSUT-8-304	NEW!
10"	3/8" x 1 1/2" x 11 1/2"	3/8"	2.30	SSUT-10-304	NEW!
12"	3/8" x 1 1/2" x 13 1/2"	3/8"	2.40	SSUT-12-304	NEW!
Also Available in Pipe Size					

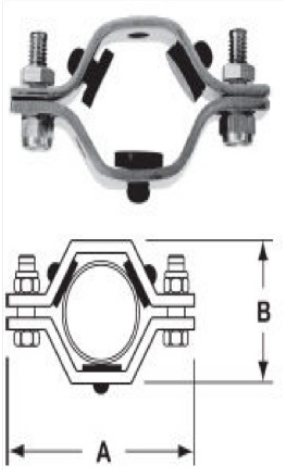

SSPHG--- SS PIPE Hanger with Grommets

Pipe (Size)	A	B	Grommet Qty/Size	Weight	Part Number 304
1/2"	3.625	2.125	3-- 1/2"	0.30	SSPHG-0.50-304
3/4"	3.625	2.533	3-- 3/8"	0.35	SSPHG-0.75-304
1"	3.625	2.125	3-- 1/4"	0.40	SSPHG-1-304
1.5"	4.320	2.813	3-- 1/4"	0.45	SSPHG-1.5-304
2"	4.875	3.250	3-- 1/4"	0.45	SSPHG-2-304
2.5"	5.375	3.875	3-- 1/4"	0.50	SSPHG-2.5-304
3"	6.167	4.320	4-- 1/8"	0.60	SSPHG-3-304
4"	7.438	5.125	4-- 1/8"	0.70	SSPHG-4-304
5"	8.062	5.625	4-- 1/8"	0.90	SSPHG-5-304
6"	9.875	7.125	5-- 1/8"	1.10	SSPHG-6-304

Note: 8",10", & 12" Available

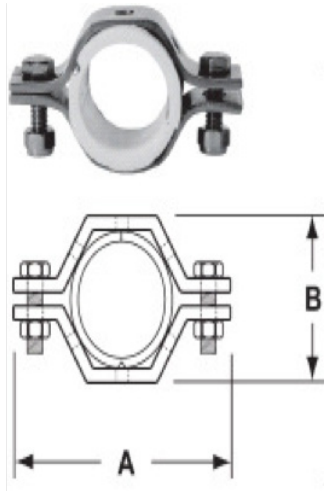

SSPHP-- SS PIPE Hanger with Polypropylene Sleve

Tube OD (Size)	A	B	Weight	Part Number 304
1/2"	2.687	2.000	0.30	SSPHP-0.50-304
3/4"	2.687	1.562	0.30	SSPHP-0.75-304
1"	3.625	2.125	0.30	SSPHP-1-304
1.5"	4.312	2.625	0.40	SSPHP-1.5-304
2"	4.875	3.125	0.40	SSPHP-2-304
2.5"	4.812	3.125	0.60	SSPHP-2.5-304
3"	6.000	4.250	0.70	SSPHP-3-304
4"	7.500	5.625	0.80	SSPHP-4-304
5"	8.375	6.375	0.90	SSPHP-5-304
6"	9.750	7.375	1.20	SSPHP-6-304

Note: 8",10", & 12" Available

PT7 - POLISHED ID/OD TUBING

Tube OD (Size)	Length	Quantity	Weight	Nominal Wall	Part Number 304 SS	Part Number 316L SS
1/2"	20'	300'	7.00	0.065		PT7-0.50-316L
3/4"	20'	300'	10.0	0.065		PT7-0.75-316L
1"	20'	300'	14.0	0.065	PT7-1-304	PT7-1-316L
1.5"	20'	300'	20.0	0.065	PT7-1.5-304	PT7-1.5-316L
2"	20'	300'	27.0	0.065	PT7-2-304	PT7-2-316L
2.5"	20'	300'	34.0	0.065	PT7-2.5-304	PT7-2.5-316L
3"	20'	200'	41.0	0.065	PT7-3-304	PT7-3-316L
4"	20'	100'	70.0	0.083	PT7-4-304	PT7-4-316L
6"	20'	100'	140	0.109	PT7-6-304	PT7-6-316L
8"	20'	20'	220	0.109	PT7-8-304	PT7-8-316L
10"	20'	20'	275	0.120	PT7-10-304	PT7-10-316L
12"	20'	20'	320	0.120	PT7-12-304	PT7-12-316L

Fuel Freight Surcharges apply to order
Call for Full Freight Allowance

SANITARY SOLUTIONS INC.

Bulldog Fittings/Valves...Bulldog Tough.

Sanitary Solutions Gaskets

Materials:

Buna

EPDM

Viton®

Platinum Silicone

Teflon®/PolySteel

® Teflon and Viton are registered trademarks of E. I. du Pont de Nemours and Company

Color:

- Black
- Red
- Blue
- White
- Green
- Mustard
- Purple

Type and Size:

Clamp
1/2" thru 12"

Flanged Clamp
1" thru 12"

I-Line
1" thru 4"

Bevel Seat
1" thru 4"

John R. Perry
1" thru 4"

Q-Line
1" thru 4"

AS-568 O-Rings

Courtesy of Flowsmart, Inc

- One Red Dot Indicates Buna
- One Yellow and one White Dot Indicates Viton
- Three Green Dots indicates EPDM

Sanitary Solutions also supplies Q-Line, Flanged, Screen, Metal Detect, Sock and Poly Steel gaskets with sizes from ½"—12". Call our team to check stock.

www.sanitarysolutions.com

Sanitary Solutions Inc. 1-888-909-3569 or 1-855-640-7871

Prices are subject to change without notice; please call before you quote

SS40MP-U-- Clamp Black BUNA-N Gaskets, TYPE 1				
Tube OD (Size)	A	B	Color Code	Part Number
1/2"	0.865	0.418	●	42MP-U-0.50
3/4"	0.865	0.625	●	42MP-U-0.75
1"	1.975	0.900	●	40MP-U-1
1.5"	1.975	1.400	●	40MP-U-1.5
2"	2.500	1.900	●	40MP-U-2
2.5"	3.000	2.400	●	40MP-U-2.5
3"	3.575	2.900	●	40MP-U-3
4"	4.690	3.875	●	40MP-U-4
5"	4.795	5.700	●	40M0-U-5
6"	6.600	5.840	●	40MO-U-6
8"	8.600	7.840	●	40MO-U-8
10"	10.65	9.795	●	40MO-U-10
12"	12.65	11.79	●	40MO-U-12

Dimensions Shown are for Field Measurements only. Parts are not manufactured to these specifications.

FDA Compliant Materials USP Class VI Tested

SS40MP-UW-- Clamp *White* BUNA-N Gaskets, TYPE 1				
Tube OD (Size)	A	B	Color Code	Part Number
1/2"	0.865	0.418	●	42MP-UW-0.50
3/4"	0.865	0.625	●	42MP-UW-0.75
1"	1.975	0.900	●	40MP-UW-1
1.5"	1.975	1.400	●	40MP-UW-1.5
2"	2.500	1.900	●	40MP-UW-2
2.5"	3.000	2.400	●	40MP-UW-2.5
3"	3.575	2.900	●	40MP-UW-3
4"	4.690	3.875	●	40MP-UW-4
5"	4.795	5.700	●	40M0-UW-5
6"	6.600	5.840	●	40MO-UW-6
8"	8.600	7.840	●	40MO-UW-8
10"	10.65	9.795	●	40MO-UW-10
12"	12.65	11.79	●	40MO-UW-12

SS40MP-E-- Clamp *Black or White EPDM* Gaskets, TYPE 1				
Tube OD (Size)	A	B	Color Code	Part Number
1/2"	0.865	0.418	● ● ●	42MP-E-0.50
3/4"	0.865	0.625	● ● ●	42MP-E-0.75
1"	1.975	0.900	● ● ●	40MP-E-1
1.5"	1.975	1.400	● ● ●	40MP-E-1.5
2"	2.500	1.900	● ● ●	40MP-E-2
2.5"	3.000	2.400	● ● ●	40MP-E-2.5
3"	3.575	2.900	● ● ●	40MP-E-3
4"	4.690	3.875	● ● ●	40MP-E-4
5"	4.795	5.700	● ● ●	40M0-E-5
6"	6.600	5.840	● ● ●	40MO-E-6
8"	8.600	7.840	● ● ●	40MO-E-8
10"	10.65	9.795	● ● ●	40MO-E-10
12"	12.65	11.79	● ● ●	40MO-E-12

Specify " EW " for White EPDM

Dimensions Shown are for Field Measurements only. Parts are not manufactured to these specifications.

FDA Compliant Materials USP Class VI Tested

SS40MP-G-- Clamp TEFLON® Gaskets, TYPE 1				
Tube OD (Size)	A	B		Part Number
1/2"	0.865	0.418		42MP-G-0.50
3/4"	0.865	0.625		42MP-G-0.75
1"	1.975	0.900		40MP-G-1
1.5"	1.975	1.400		40MP-G-1.5
2"	2.500	1.900		40MP-G-2
2.5"	3.000	2.400		40MP-G-2.5
3"	3.575	2.900		40MP-G-3
4"	4.690	3.875		40MP-G-4
5"	4.795	5.700		40M0-G-5
6"	6.600	5.840		40MO-G-6
8"	8.600	7.840		40MO-G-8
10"	10.65	9.795		40MO-G-10
12"	12.65	11.79		40MO-G-12

SS40MP-G-BL Clamp BLUE TEFLON® Gaskets, TYPE 1				
Tube OD (Size)	A	B		Part Number
1/2"	0.865	0.418		42MP-G-BL-0.50
3/4"	0.865	0.625		42MP-G-BL-0.75
1"	1.975	0.900		40MP-G-BL-1
1.5"	1.975	1.400		40MP-G-BL-1.5
2"	2.500	1.900		40MP-G-BL-2
2.5"	3.000	2.400		40MP-G-BL-2.5
3"	3.575	2.900		40MP-G-BL-3
4"	4.690	3.875		40MP-G-BL-4
5"	4.795	5.700		40M0-G-BL-5
6"	6.600	5.840		40MO-G-BL-6
8"	8.600	7.840		40MO-G-BL-8
10"	10.65	9.795		40MO-G-BL-10
12"	12.65	11.79		40MO-G-BL-12

Dimensions Shown are for Field Measurements only. Parts are not manufactured to these specifications.

FDA Compliant Materials USP Class VI Tested

SS40MP-SFY-- Clamp *Black VITON®* Gaskets, TYPE 1				
Tube OD (Size)	A	B	Color Code	Part Number
1/2"	0.865	0.418	● ○	42MP-SFY-0.50
3/4"	0.865	0.625	● ○	42MP-SFY-0.75
1"	1.975	0.900	● ○	40MP-SFY-1
1.5"	1.975	1.400	● ○	40MP-SFY-1.5
2"	2.500	1.900	● ○	40MP-SFY-2
2.5"	3.000	2.400	● ○	40MP-SFY-2.5
3"	3.575	2.900	● ○	40MP-SFY-3
4"	4.690	3.875	● ○	40MP-SFY-4
5"	4.795	5.700	● ○	40M0-SFY-5
6"	6.600	5.840	● ○	40MO-SFY-6
8"	8.600	7.840	● ○	40MO-SFY-8
10"	10.65	9.795	● ○	40MO-SFY-10
12"	12.65	11.79	● ○	40MO-SFY-12

Specify "SFYW" for a WHITE Viton Gasket

SS40MP-X- Clamp White or Clear *SILICONE* Gaskets,TYPE 1				
Tube OD (Size)	A	B		Part Number
1/2"	0.865	0.418		42MP-X-0.50
3/4"	0.865	0.625		42MP-X-0.75
1"	1.975	0.900		40MP-X-1
1.5"	1.975	1.400		40MP-X-1.5
2"	2.500	1.900		40MP-X-2
2.5"	3.000	2.400		40MP-X-2.5
3"	3.575	2.900		40MP-X-3
4"	4.690	3.875		40MP-X-4
5"	4.795	5.700		40MO-X-5
6"	6.600	5.840		40MO-X-6
8"	8.600	7.840		40MO-X-8
10"	10.65	9.795		40MO-X-10
12"	12.65	11.79		40MO-X-12

Red Silicone Available!!!!

Dimensions Shown are for Field Measurements only. Parts are not manufactured to these specifications.

FDA Compliant Materials USP Class VI Tested

SS40RXPX-- Clamp Platinum *SILICONE* Gaskets, TYPE 1				
Tube OD (Size)	A	B		Part Number
1/2"	0.865	0.418		42RXPX-0.50
3/4"	0.865	0.625		42RXPX-0.75
1"	1.975	0.900		40RXPX-1
1.5"	1.975	1.400		40RXPX-1.5
2"	2.500	1.900		40RXPX-2
2.5"	3.000	2.400		40RXPX-2.5
3"	3.575	2.900		40RXPX-3
4"	4.690	3.875		40RXPX-4
5"	4.795	5.700		40RXPX-5
6"	6.600	5.840		40RXPX-6
8"	8.600	7.840		40RXPX-8
10"	10.65	9.795		40RXPX-10
12"	12.65	11.79		40RXPX-12

SS40MPG-PS-Clamp Poly Steel-PTFE/316L Gasket TYPE 1				
Tube OD (Size)	A	B		Part Number
1/2"	0.865	0.418		42MPG-PS-0.50
3/4"	0.865	0.625		42MPG-PS-0.75
1"	1.975	0.900		40MPG-PS-1
1.5"	1.975	1.400		40MPG-PS-1.5
2"	2.500	1.900		40MPG-PS-2
2.5"	3.000	2.400		40MPG-PS-2.5
3"	3.575	2.900		40MPG-PS-3
4"	4.690	3.875		40MPG-PS-4
5"	4.795	5.700		40MPG-PS-5
6"	6.600	5.840		40MPG-PS-6
8"	8.600	7.840		40MPG-PS-8
10"	10.65	9.795		40MPG-PS-10
12"	12.65	11.79		40MPG-PS-12

Dimensions Shown are for Field Measurements only. Parts are not manufactured to these specifications.

FDA Compliant Materials USP Class VI Tested

SS40MPF-U-*FLANGED* Black *Buna-N* Clamp Gasket,T- 2					
Tube OD (Size)	A	B	C	Color Code	Part Number
1"	2.058	0.910	1.978	●	40MPF-U-1
1.5"	2.058	1.410	1.978	●	40MPF-U-1.5
2"	2.590	1.910	2.510	●	40MPF-U-2
2.5"	3.121	2.410	3.041	●	40MPF-U-2.5
3"	3.653	2.910	3.573	●	40MPF-U-3
4"	4.756	3.880	4.676	●	40MPF-U-4
6"	6.644	5.832	6.564	●	40MOF-U-6
8"	8.644	7.892	8.564	●	40MOF-U-8
10"	10.64	9.782	10.56	●	40MOF-U-10
12"	12.64	11.78	12.56	●	40MOF-U-12

SS40MPF-UW-*FLANGED* White *Buna-N* Clamp Gasket,T 2					
Tube OD (Size)	A	B	C	Color Code	Part Number
1"	2.058	0.910	1.978	●	40MPF-UW-1
1.5"	2.058	1.410	1.978	●	40MPF-UW-1.5
2"	2.590	1.910	2.510	●	40MPF-UW-2
2.5"	3.121	2.410	3.041	●	40MPF-UW-2.5
3"	3.653	2.910	3.573	●	40MPF-UW-3
4"	4.756	3.880	4.676	●	40MPF-UW-4
6"	6.644	5.832	6.564	●	40MOF-UW-6
8"	8.644	7.892	8.564	●	40MOF-UW-8
10"	10.64	9.782	10.56	●	40MOF-UW-10
12"	12.64	11.78	12.56	●	40MOF-UW-12

Dimensions Shown are for Field Measurements only. Parts are not manufactured to these specifications.

FDA Compliant Materials USP Class VI Tested

SS40MPF-E-*FLANGED* Black *EPDM* Clamp Gasket, T- 2					
Tube OD (Size)	A	B	C	Color Code	Part Number
1"	2.058	0.910	1.978	● ● ●	40MPF-E-1
1.5"	2.058	1.410	1.978	● ● ●	40MPF-E-1.5
2"	2.590	1.910	2.510	● ● ●	40MPF-E-2
2.5"	3.121	2.410	3.041	● ● ●	40MPF-E-2.5
3"	3.653	2.910	3.573	● ● ●	40MPF-E-3
4"	4.756	3.880	4.676	● ● ●	40MPF-E-4
6"	6.644	5.832	6.564	● ● ●	40MOF-E-6
8"	8.644	7.892	8.564	● ● ●	40MOF-E-8
10"	10.64	9.782	10.56	● ● ●	40MOF-E-10
12"	12.64	11.78	12.56	● ● ●	40MOF-E-12

SS40MPF-X-*FLANGED* Silicone Clamp Gasket, Type 2					
Tube OD (Size)	A	B	C		Part Number
1"	2.058	0.910	1.978		40MPF-X-1
1.5"	2.058	1.410	1.978		40MPF-X-1.5
2"	2.590	1.910	2.510		40MPF-X-2
2.5"	3.121	2.410	3.041		40MPF-X-2.5
3"	3.653	2.910	3.573		40MPF-X-3
4"	4.756	3.880	4.676		40MPF-X-4
6"	6.644	5.832	6.564		40MOF-X-6
8"	8.644	7.892	8.564		40MOF-X-8
10"	10.64	9.782	10.56		40MOF-X-10
12"	12.64	11.78	12.56		40MOF-X-12

Dimensions Shown are for Field Measurements only. Parts are not manufactured to these specifications.

FDA Compliant Materials USP Class VI Tested

SS40RXPX-F- *FLANGED Platinum* Silicone Clamp Gasket					
Tube OD (Size)	A	B	C		Part Number
1"	2.058	0.910	1.978		40RXPX-F-1
1.5"	2.058	1.410	1.978		40RXPX-F-1.5
2"	2.590	1.910	2.510		40RXPX-F-2
2.5"	3.121	2.410	3.041		40RXPX-F-2.5
3"	3.653	2.910	3.573		40RXPX-F-3
4"	4.756	3.880	4.676		40RXPX-F-4
6"	6.644	5.832	6.564		40RXPX-F-6
8"	8.644	7.892	8.564		40RXPX-F-8
10"	10.64	9.782	10.56		40RXPX-F-10
12"	12.64	11.78	12.56		40RXPX-F-12

SS40MPF-SFY--- *FLANGED Viton®* Clamp Gasket, Type 2					
Tube OD (Size)	A	B	C	Color Code	Part Number
1"	2.058	0.910	1.978		40MPF-SFY-1
1.5"	2.058	1.410	1.978		40MPF-SFY-1.5
2"	2.590	1.910	2.510		40MPF-SFY-2
2.5"	3.121	2.410	3.041		40MPF-SFY-2.5
3"	3.653	2.910	3.573		40MPF-SFY-3
4"	4.756	3.880	4.676		40MPF-SFY-4
6"	6.644	5.832	6.564		40MPF-SFY-6
8"	8.644	7.892	8.564		40MPF-SFY-8
10"	10.64	9.782	10.56		40MPF-SFY-10
12"	12.64	11.78	12.56		40MPF-SFY-12

Dimensions Shown are for Field Measurements only.
Parts are not manufactured to these specifications.

FDA Compliant Materials USP Class VI Tested

SS40MPUS- BUNA Screen Gasket, 10 Mesh Standard, T- 3		
Tube OD (Size)	Color Code	Part Number
1"		40MPUS-1
1.5"		40MPUS-1.5
2"		40MPUS-2
2.5"		40MPUS-2.5
3"		40MPUS-3
4"		40MPUS-4
6"		40MOUS-6
8"		40MOUS-8

Teflon, Poly Steel & Platinum Cured Silicone are Available!

20, 40, 60, 80, 100 Meshes Available

SS40MPUE-EPDM Screen Gasket, 10 Mesh Standard, T- 3		
Tube OD (Size)	Color Code	Part Number
1"	● ● ●	40MPUE-1
1.5"	● ● ●	40MPUE-1.5
2"	● ● ●	40MPUE-2
2.5"	● ● ●	40MPUE-2.5
3"	● ● ●	40MPUE-3
4"	● ● ●	40MPUE-4
6"	● ● ●	40MOUE-6
8"	● ● ●	40MOUE-8

Teflon, Poly Steel & Platinum Cured Silicone are Available!

20, 40, 60, 80, 100 Meshes Available

SS40MVS- VITON® Screen Gasket,10 Mesh Standard, T- 3		
Tube OD (Size)	Color Code	Part Number
1"	● ●	40MVS-1
1.5"	● ●	40MVS-1.5
2"	● ●	40MVS-2
2.5"	● ●	40MVS-2.5
3"	● ●	40MVS-3
4"	● ●	40MVS-4
6"	● ●	40MVS-6
8"	● ●	40MVS-8

Teflon, Poly Steel & Platinum Cured Silicone are Available!

20, 40, 60, 80, 100 Meshes Available

SS40MPGRE-- Teflon Envelope (EPDM) Gaskets				
Tube OD (Size)	A	B	Color Code	Part Number
1/2"	0.865	0.418	● ● ●	42MPGRE-0.50
3/4"	0.865	0.625	● ● ●	42MPGRE-0.75
1"	1.975	0.900	● ● ●	40MPGRE-1
1.5"	1.975	1.400	● ● ●	40MPGRE-1.5
2"	2.500	1.900	● ● ●	40MPGRE-2
2.5"	3.000	2.400	● ● ●	40MPGRE-2.5
3"	3.575	2.900	● ● ●	40MPGRE-3
4"	4.690	3.875	● ● ●	40MPGRE-4
5"	4.795	5.700	● ● ●	40MPGRE-5
6"	6.600	5.840	● ● ●	40MPGRE-6

Dimensions Shown are for Field Measurements only. Parts are not manufactured to these specifications.

FDA Compliant Materials USP Class VI Tested

SS40MPGRV-- Teflon Envelope (VITON) Gaskets				
Tube OD (Size)	A	B	Color Code	Part Number
1/2"	0.865	0.418	● ○	42MPGRV-0.50
3/4"	0.865	0.625	● ○	42MPGRV-0.75
1"	1.975	0.900	● ○	40MPGRV-1
1.5"	1.975	1.400	● ○	40MPGRV-1.5
2"	2.500	1.900	● ○	40MPGRV-2
2.5"	3.000	2.400	● ○	40MPGRV-2.5
3"	3.575	2.900	● ○	40MPGRV-3
4"	4.690	3.875	● ○	40MPGRV-4
5"	4.795	5.700	● ○	40MPGRV-5
6"	6.600	5.840	● ○	40MPGRV-6

SS101-H--- *Gray APC* Gaskets		
Tube OD (Size)		Part Number
1"		SS101-H-1
1.5"		SS101-H-1.5
2"		SS101-H-2
2.5"		SS101-H-2.5
3"		SS101-H-3
4"		SS101-H-4

SS101-HX--- *Black APC* Gaskets		
Tube OD (Size)		Part Number
1"		SS101-HX-1
1.5"		SS101-HX-1.5
2"		SS101-HX-2
2.5"		SS101-HX-2.5
3"		SS101-HX-3
4"		SS101-HX-4

SS40BSF--- *FLAT* Black *Buna-N* Bevel Seat Gasket					
Tube OD (Size)	A	B	C	Color Code	Part Number
1"	0.900	1.350	0.250	●	40BSF-1
1.5"	1.375	1.850	0.320	●	40BSF-1.5
2"	1.825	2.350	0.320	●	40BSF-2
2.5"	2.500	2.970	0.325	●	40BSF-2.5
3"	2.975	3.420	0.325	●	40BSF-3
4"	3.750	4.500	0.450	●	40BSF-4

Dimensions Shown are for Field Measurements only.
Parts are not manufactured to these specifications.

FDA Compliant Materials USP Class VI Tested

SS40BSO--- Black *Buna-N* Bevel Seat Gasket					
Tube OD (Size)	A	B	C	Color Code	Part Number
1"	0.900	1.350	0.250	●	40BSO-1
1.5"	1.375	1.850	0.320	●	40BSO-1.5
2"	1.825	2.350	0.320	●	40BSO-2
2.5"	2.500	2.970	0.325	●	40BSO-2.5
3"	2.975	3.420	0.325	●	40BSO-3
4"	3.750	4.500	0.450	●	40BSO-4

Dimensions Shown are for Field Measurements only. Parts are not manufactured to these specifications.

FDA Compliant Materials USP Class VI Tested

SS40BSE--- Black *EPDM* Bevel Seat Gasket					
Tube OD (Size)	A	B	C	Color Code	Part Number
1"	0.900	1.350	0.250	● ● ●	40BSE-1
1.5"	1.375	1.850	0.320	● ● ●	40BSE-1.5
2"	1.825	2.350	0.320	● ● ●	40BSE-2
2.5"	2.500	2.970	0.325	● ● ●	40BSE-2.5
3"	2.975	3.420	0.325	● ● ●	40BSE-3
4"	3.750	4.500	0.450	● ● ●	40BSE-4

SS40BSY--- Black *VITON®* Bevel Seat Gasket					
Tube OD (Size)	A	B	C	Color Code	Part Number
1"	0.900	1.350	0.250	● ○	40BSY-1
1.5"	1.375	1.850	0.320	● ○	40BSY-1.5
2"	1.825	2.350	0.320	● ○	40BSY-2
2.5"	2.500	2.970	0.325	● ○	40BSY-2.5
3"	2.975	3.420	0.325	● ○	40BSY-3
4"	3.750	4.500	0.450	● ○	40BSY-4

Dimensions Shown are for Field Measurements only.
Parts are not manufactured to these specifications.

FDA Compliant Materials USP Class VI Tested

SS40BSS--- *TEFLON®* Bevel Seat Gasket (DHR)					
Tube OD (Size)	A	B	C		Part Number
1"	0.900	1.350	0.250		40BSS-1
1.5"	1.375	1.850	0.320		40BSS-1.5
2"	1.825	2.350	0.320		40BSS-2
2.5"	2.500	2.970	0.325		40BSS-2.5
3"	2.975	3.420	0.325		40BSS-3
4"	3.750	4.500	0.450		40BSS-4

SS40BSH--- Heavy Duty *TEFLON®* Bevel Seat Gasket					
Tube OD (Size)	A	B	C		Part Number
1"	0.900	1.350	0.250		40BSH-1
1.5"	1.375	1.850	0.320		40BSH-1.5
2"	1.825	2.350	0.320		40BSH-2
2.5"	2.500	2.970	0.325		40BSH-2.5
3"	2.975	3.420	0.325		40BSH-3
4"	3.750	4.500	0.450		40BSH-4

SS40BSX--- White SILICONE Bevel Seat Gasket					
Tube OD (Size)	A	B	C		Part Number
1"	0.900	1.350	0.250		40BSX-1
1.5"	1.375	1.850	0.320		40BSX-1.5
2"	1.825	2.350	0.320		40BSX-2
2.5"	2.500	2.970	0.325		40BSX-2.5
3"	2.975	3.420	0.325		40BSX-3
4"	3.750	4.500	0.450		40BSX-4

Dimensions Shown are for Field Measurements only. Parts are not manufactured to these specifications.

FDA Compliant Materials USP Class VI Tested

SS40JPU--- John Perry *BUNA N* Black Gaskets				
Tube OD (Size)	A	B	Color Code	Part Number
1"	1.280	1.090	●	40JPU-1
1.5"	1.375	1.650	●	40JPU-1.5
2"	2.320	2.160	●	40JPU-2
2.5"	2.840	2.650	●	40JPU-2.5
3"	3.350	3.200	●	40JPU-3
4"	4.360	4.200	●	40JPU-4

SS40JPE--- John Perry *EPDM* Black Gaskets				
Tube OD (Size)	A	B	Color Code	Part Number
1"	1.280	1.090	● ● ●	40JPE-1
1.5"	1.375	1.650	● ● ●	40JPE-1.5
2"	2.320	2.160	● ● ●	40JPE-2
2.5"	2.840	2.650	● ● ●	40JPE-2.5
3"	3.350	3.200	● ● ●	40JPE-3
4"	4.360	4.200	● ● ●	40JPE-4

SS40JPG--- John Perry *TEFLON®* Black Gaskets				
Tube OD (Size)	A	B		Part Number
1"	1.280	1.090		40JPG-1
1.5"	1.375	1.650		40JPG-1.5
2"	2.320	2.160		40JPG-2
2.5"	2.840	2.650		40JPG-2.5
3"	3.350	3.200		40JPG-3
4"	4.360	4.200		40JPG-4

Dimensions Shown are for Field Measurements only. Parts are not manufactured to these specifications.

FDA Compliant Materials USP Class VI Tested

SS40JPSFY--- John Perry *VITON®* Black Gaskets				
Tube OD (Size)	A	B	Color Code	Part Number
1"	1.280	1.090	● ○	40JPSFY-1
1.5"	1.375	1.650	● ○	40JPSFY-1.5
2"	2.320	2.160	● ○	40JPSFY-2
2.5"	2.840	2.650	● ○	40JPSFY-2.5
3"	3.350	3.200	● ○	40JPSFY-3
4"	4.360	4.200	● ○	40JPSFY-4

Dimensions Shown are for Field Measurements only. Parts are not manufactured to these specifications.

FDA Compliant Materials USP Class VI Tested

SS40IH--- *I-Line BUNA-N* Black Gaskets, 3/32"				
Tube OD (Size)	A	B	Color Code	Part Number
1"	1.280	0.900	●	40IH-1
1.5"	1.780	1.400	●	40IH-1.5
2"	2.260	1.900	●	40IH-2
2.5"	2.780	2.400	●	40IH-2.5
3"	3.350	2.900	●	40IH-3
4"	4.400	3.900	●	40IH-4
6"	6.700	6.400	●	40IH-6

SS40IE--- *I-Line EPDM* Black Gaskets, 3/32"				
Tube OD (Size)	A	B	Color Code	Part Number
1"	1.280	0.900	● ● ●	40IE-1
1.5"	1.780	1.400	● ● ●	40IE-1.5
2"	2.260	1.900	● ● ●	40IE-2
2.5"	2.780	2.400	● ● ●	40IE-2.5
3"	3.350	2.900	● ● ●	40IE-3
4"	4.400	3.900	● ● ●	40IE-4
6"	6.700	6.400	● ● ●	40IE-6

SS40IT--- *I-Line TEFLON®* White Gaskets, 3/32"				
Tube OD (Size)	A	B		Part Number
1"	1.280	0.900		40IT-1
1.5"	1.780	1.400		40IT-1.5
2"	2.260	1.900		40IT-2
2.5"	2.780	2.400		40IT-2.5
3"	3.350	2.900		40IT-3
4"	4.400	3.900		40IT-4
6"	6.700	6.400		40IT-6

Dimensions Shown are for Field Measurements only. Parts are not manufactured to these specifications.

FDA Compliant Materials USP Class VI Tested

SS40IV--- *I-Line VITON®* Gaskets, 3/32"				
Tube OD (Size)	A	B	Color Code	Part Number
1"	1.280	0.900		40IV-1
1.5"	1.780	1.400		40IV-1.5
2"	2.260	1.900		40IV-2
2.5"	2.780	2.400		40IV-2.5
3"	3.350	2.900		40IV-3
4"	4.400	3.900		40IV-4
6"	6.700	6.400		40IV-6

SS40IT-PS--- *I-Line Poly Steel* Gaskets, (Molded)				
Tube OD (Size)	A	B		Part Number
1"	1.280	0.900		40IT-PS-1
1.5"	1.780	1.400		40IT-PS-1.5
2"	2.260	1.900		40IT-PS-2
2.5"	2.780	2.400		40IT-PS-2.5
3"	3.350	2.900		40IT-PS-3
4"	4.400	3.900		40IT-PS-4
6"	6.700	6.400		40IT-PS-6

SS40QH--- Q-LINE *BUNA* Black Gaskets				
Tube OD (Size)	A	B	Color Code	Part Number
1"	1.975	2.070	●	40QH-1
1.5"	1.975	2.070	●	40QH-1.5
2"	2.500	2.600	●	40QH-2
2.5"	3.000	3.140	●	40QH-2.5
3"	3.575	3.640	●	40QH-3
4"	4.690	4.760	●	40QH-4

Dimensions Shown are for Field Measurements only. Parts are not manufactured to these specifications.

FDA Compliant Materials USP Class VI Tested

SS40QE--- Q-LINE *EPDM* Black Gaskets				
Tube OD (Size)	A	B	Color Code	Part Number
1"	1.975	2.070	● ● ●	40QE-1
1.5"	1.975	2.070	● ● ●	40QE-1.5
2"	2.500	2.600	● ● ●	40QE-2
2.5"	3.000	3.140	● ● ●	40QE-2.5
3"	3.575	3.640	● ● ●	40QE-3
4"	4.690	4.760	● ● ●	40QE-4

SS40QT--- Q-LINE White *TEFLON®* Gaskets				
Tube OD (Size)	A	B		Part Number
1"	1.975	2.070		40QT-1
1.5"	1.975	2.070		40QT-1.5
2"	2.500	2.600		40QT-2
2.5"	3.000	3.140		40QT-2.5
3"	3.575	3.640		40QT-3
4"	4.690	4.760		40QT-4

SS40QSFY--- Q-LINE Black *VITON®* Black Gaskets				
Tube OD (Size)	A	B	Color Code	Part Number
1"	1.975	2.070	● ○	40QSFY-1
1.5"	1.975	2.070	● ○	40QSFY-1.5
2"	2.500	2.600	● ○	40QSFY-2
2.5"	3.000	3.140	● ○	40QSFY-2.5
3"	3.575	3.640	● ○	40QSFY-3
4"	4.690	4.760	● ○	40QSFY-4

Dimensions Shown are for Field Measurements only. Parts are not manufactured to these specifications.

FDA Compliant Materials USP Class VI Tested

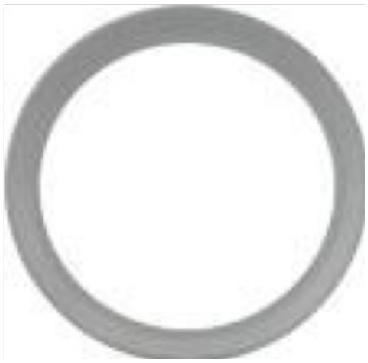

SS40MVFU- *FLANGED Sch. 5 (PIPE) BUNA* Clamp Gasket					
Tube OD (Size)	A	B	C	Color Code	Part Number
1"	2.600	1.200	1.980	●	40MVFU-1
1.5"	2.600	1.700	2.500	●	40MVFU-1.5
2"	3.100	2.300	3.000	●	40MVFU-2
2.5"	3.700	2.750	3.600	●	40MVFU-2.5
3"	4.100	3.375	4.200	●	40MVFU-3
4"	5.100	4.375	5.200	●	40MVFU-4
6"	7.300	6.500	7.200	●	40MVFU-6
8"	9.300	8.500	9.200	●	40MVFU-8
10"	11.40	9.800	11.40	●	40MVFU-10
12"	13.40	11.80	13.40	●	40MVFU-12

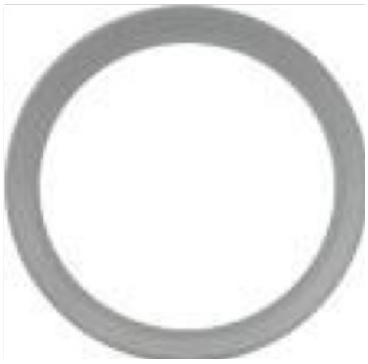

SS40MVFE-*FLANGED Sch. 5 (PIPE) EPDM* Clamp Gasket					
Tube OD (Size)	A	B	C	Color Code	Part Number
1"	2.600	1.200	1.980	● ● ●	40MVFE-1
1.5"	2.600	1.700	2.500	● ● ●	40MVFE-1.5
2"	3.100	2.300	3.000	● ● ●	40MVFE-2
2.5"	3.700	2.750	3.600	● ● ●	40MVFE-2.5
3"	4.100	3.375	4.200	● ● ●	40MVFE-3
4"	5.100	4.375	5.200	● ● ●	40MVFE-4
6"	7.300	6.500	7.200	● ● ●	40MVFE-6
8"	9.300	8.500	9.200	● ● ●	40MVFE-8
10"	11.40	9.800	11.40	● ● ●	40MVFE-10
12"	13.40	11.80	13.40	● ● ●	40MVFE-12

SS40MVFX- *FLANGED Sch. 5 (PIPE) SILICONE* Gaskets					
Tube OD (Size)	A	B	C		Part Number
1"	2.600	1.200	1.980		40MVFX-1
1.5"	2.600	1.700	2.500		40MVFX-1.5
2"	3.100	2.300	3.000		40MVFX-2
2.5"	3.700	2.750	3.600		40MVFX-2.5
3"	4.100	3.375	4.200		40MVFX-3
4"	5.100	4.375	5.200		40MVFX-4
6"	7.300	6.500	7.200		40MVFX-6
8"	9.300	8.500	9.200		40MVFX-8
10"	11.40	9.800	11.40		40MVFX-10
12"	13.40	11.80	13.40		40MVFX-12 *Available in White*

Dimensions Shown are for Field Measurements only. Parts are not manufactured to these specifications.

FDA Compliant Materials USP Class VI Tested

SS40MVFSFY- *FLANGED Sch. 5 (PIPE) VITON®* Gaskets					
Tube OD (Size)	A	B	C	Color Code	Part Number
1"	*2.600*	1.200	1.980		40MVFSFY-1
1.5"	*2.600*	1.700	2.500		40MVFSFY-1.5
2"	*3.100*	2.300	3.000		40MVFSFY-2
2.5"	*3.700*	2.750	3.600		40MVFSFY-2.5
3"	*4.100*	3.375	4.200		40MVFSFY-3
4"	*5.100*	4.375	5.200		40MVFSFY-4
6"	*7.300*	6.500	7.200		40MVFSFY-6
8"	*9.300*	8.500	9.200		40MVFSFY-8
10"	*11.40*	9.800	11.40		40MVFSFY-10
12"	*13.40*	11.80	13.40		40MVFSFY-12

SS40MPUP--- .033 Plate Perforated Metal Gaskets	
Tube OD (Size)	Part Number
1"	40MPUP-1
1.5"	40MPUP-1.5
2"	40MPUP-2
2.5"	40MPUP-2.5
3"	40MPUP-3
4"	40MPUP-4

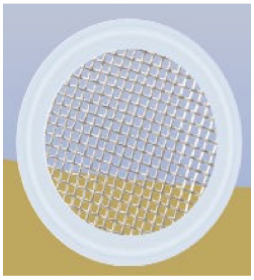

Other Sizes Available

SS40MPGS- Screen Gaskets- 20, 40, 60, 80, 100 MESH	
Tube OD (Size)	Part Number
1"	40MPGS-1
1.5"	40MPGS-1.5
2"	40MPGS-2
2.5"	40MPGS-2.5
3"	40MPGS-3
4"	40MPGSP-4

Dimensions Shown are for Field Measurements only. Parts are not manufactured to these specifications.

A80MPU--- *BUNA N* ORFICE PLATE--- 1/8" Hole				
Tube OD (Size)	A	B	Color Code	Part Number
1/2"	0.865	0.418	●	A80MPU-0.50
3/4"	0.865	0.625	●	A80MPU-0.75
1"	1.975	0.900	●	A80MPU-1
1.5"	1.975	1.400	●	A80MPU-1.5
2"	2.500	1.900	●	A80MPU-2
2.5"	3.000	2.400	●	A80MPU-2.5
3"	3.575	2.900	●	A80MPU-3
4"	4.690	3.875	●	A80MPU-4

Dimensions Shown are for Field Measurements only. Parts are not manufactured to these specifications.

A80MPE---Black *EPDM* ORFICE PLATE--- 1/8" Hole				
Tube OD (Size)	A	B	Color Code	Part Number
1/2"	0.865	0.418	● ● ●	A80MPE-0.50
3/4"	0.865	0.625	● ● ●	A80MPE-0.75
1"	1.975	0.900	● ● ●	A80MPE-1
1.5"	1.975	1.400	● ● ●	A80MPE-1.5
2"	2.500	1.900	● ● ●	A80MPE-2
2.5"	3.000	2.400	● ● ●	A80MPE-2.5
3"	3.575	2.900	● ● ●	A80MPE-3
4"	4.690	3.875	● ● ●	A80MPE-4

A80MPG--- *TEFLON ®* ORFICE PLATE--- 1/8" Hole				
Tube OD (Size)	A	B		Part Number
1/2"	0.865	0.418		A80MPG-0.50
3/4"	0.865	0.625		A80MPG-0.75
1"	1.975	0.900		A80MPG-1
1.5"	1.975	1.400		A80MPG-1.5
2"	2.500	1.900		A80MPG-2
2.5"	3.000	2.400		A80MPG-2.5
3"	3.575	2.900		A80MPG-3
4"	4.690	3.875		A80MPG-4

A80RXPX--- *Platinum Silicone* ORFICE PLATE--- 1/8" Hole				
Tube OD (Size)	A	B		Part Number
1/2"	0.865	0.418		A80RXPX-0.50
3/4"	0.865	0.625		A80RXPX-0.75
1"	1.975	0.900		A80RXPX-1
1.5"	1.975	1.400		A80RXPX-1.5
2"	2.500	1.900		A80RXPX-2
2.5"	3.000	2.400		A80RXPX-2.5
3"	3.575	2.900		A80RXPX-3
4"	4.690	3.875		A80RXPX-4

A80MPG-PS--- *Poly Steel PTFE/316L* ORFICE PLATE--- 1/8" Hole				
Tube OD (Size)	A	B		Part Number
1/2"	0.865	0.418		A80MPG-PS-0.50
3/4"	0.865	0.625		A80MPG-PS-0.75
1"	1.975	0.900		A80MPG-PS-1
1.5"	1.975	1.400		A80MPG-PS-1.5
2"	2.500	1.900		A80MPG-PS-2
2.5"	3.000	2.400		A80MPG-PS-2.5
3"	3.575	2.900		A80MPG-PS-3
4"	4.690	3.875		A80MPG-PS-4

A80MPV--- VITON ® ORFICE PLATE--- 1/8" Hole				
Tube OD (Size)	A	B	Color Code	Part Number
1/2"	0.865	0.418	● ●	A80MPV-0.50
3/4"	0.865	0.625	● ●	A80MPV-0.75
1"	1.975	0.900	● ●	A80MPV-1
1.5"	1.975	1.400	● ●	A80MPV-1.5
2"	2.500	1.900	● ●	A80MPV-2
2.5"	3.000	2.400	● ●	A80MPV-2.5
3"	3.575	2.900	● ●	A80MPV-3
4"	4.690	3.875	● ●	A80MPV-4

Dimensions Shown are for Field Measurements only. Parts are not manufactured to these specifications.

www.sanitarysolutions.com

SANITARY SOLUTIONS INC.

Bulldog Fittings/Valves...Bulldog Tough.

A3® Inline and Side Entry Filter/Strainer

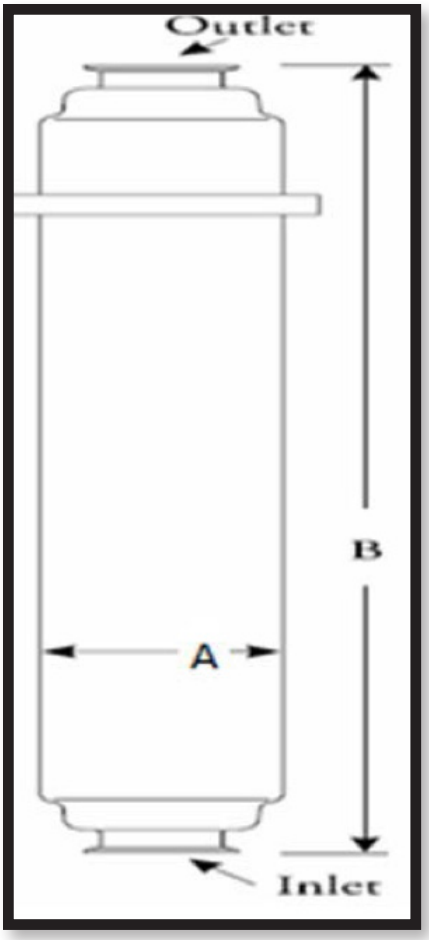

SHORT INLINE Filter/ Strainer Dimensions	Tube OD Size	Length (in.) A	Length (in.) B	Effective Filter Area
	1.5”	4.00	15.75	0.65
	2.0”	4.00	15.75	0.65
	2.5”	4.50	15.75	0.75
	3.0	4.50	15.75	0.75

LONG INLINE Filter/ Strainer Dimensions	Tube OD Size	Length (in.) A	Length (in.) B	Effective Filter Area
	1.5”	4.00	35.38	0.65
	2.0”	4.00	35.38	0.65
	2.5”	4.50	35.38	0.75
	3.0	4.50	35.38	0.75

In-Line Filter/Strainer Breakdown

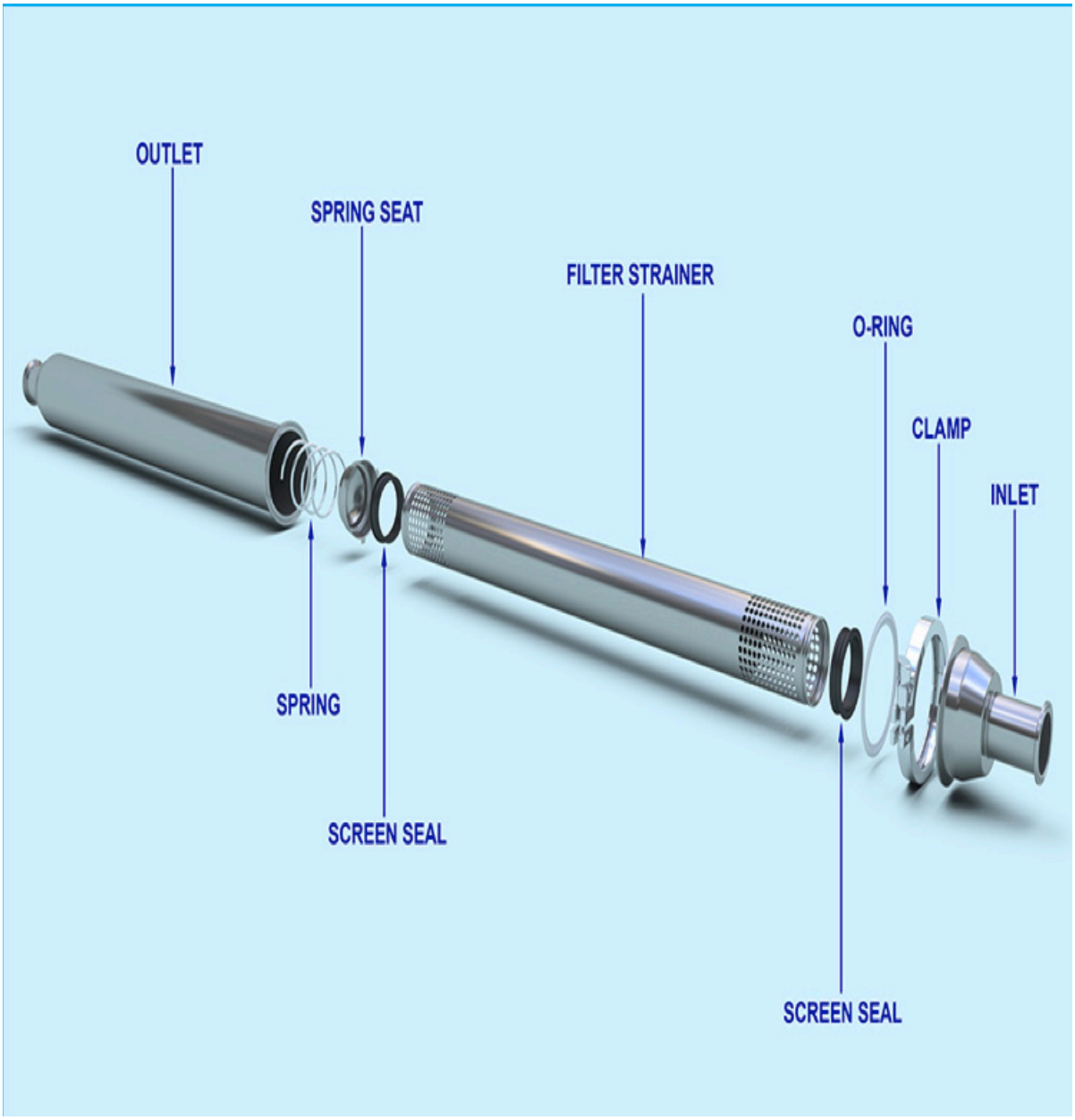

In-Line & Side Outlet Parts Breakdown

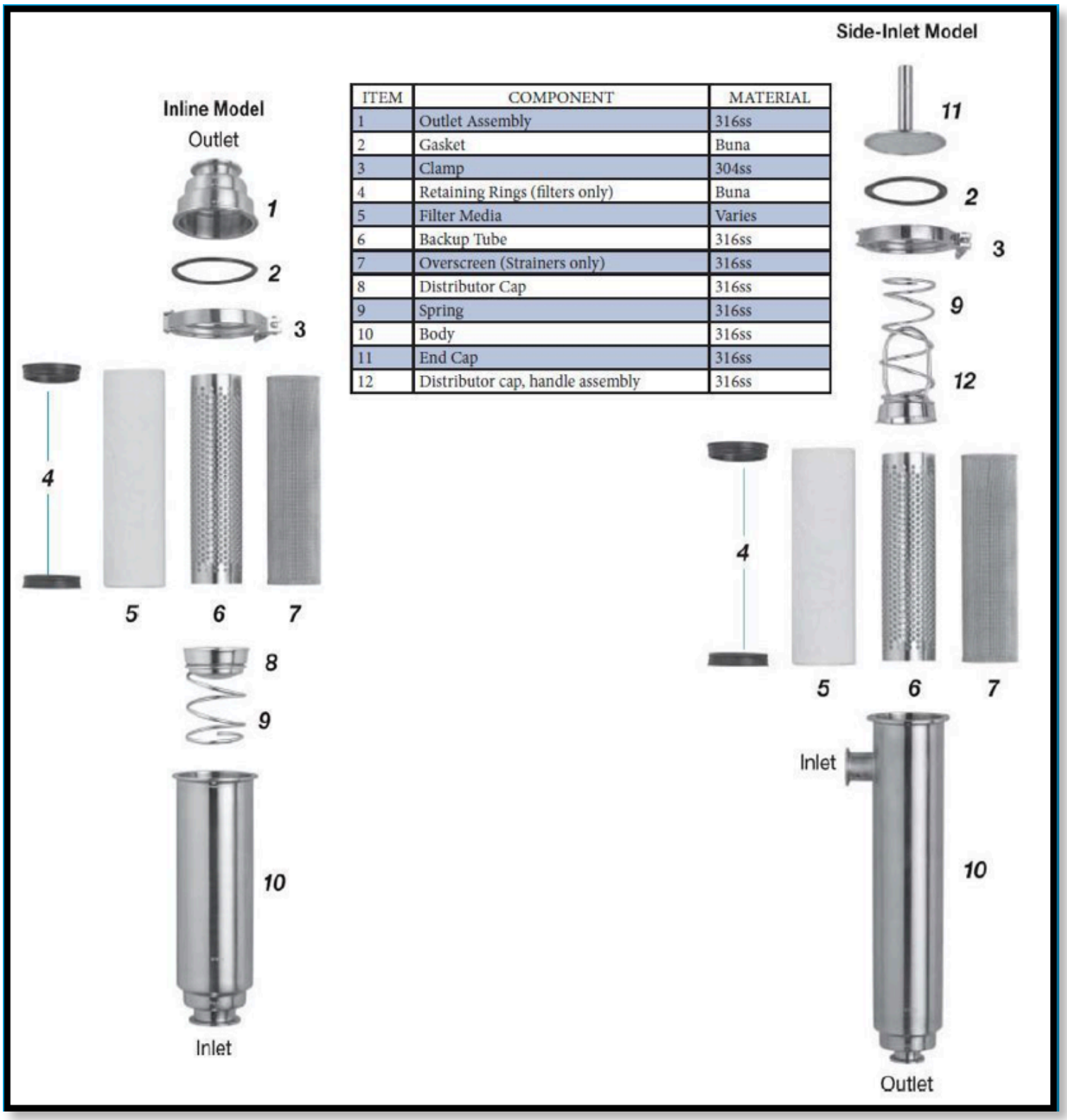

ITEM	COMPONENT	MATERIAL
1	Outlet Assembly	316ss
2	Gasket	Buna
3	Clamp	304ss
4	Retaining Rings (filters only)	Buna
5	Filter Media	Varies
6	Backup Tube	316ss
7	Overscreen (Strainers only)	316ss
8	Distributor Cap	316ss
9	Spring	316ss
10	Body	316ss
11	End Cap	316ss
12	Distributor cap, handle assembly	316ss

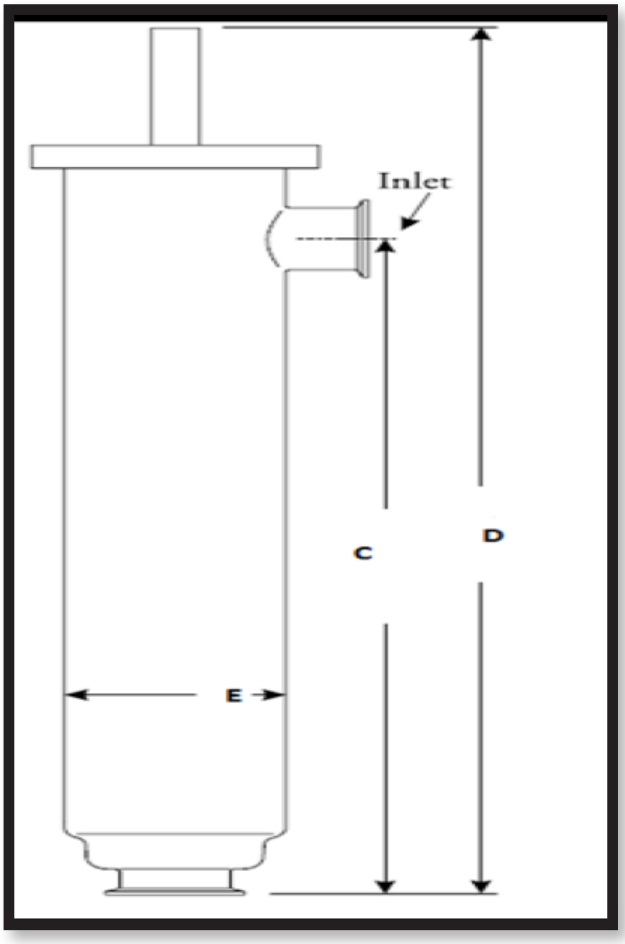

SHORT INLINE Filter/ Strainer Dimensions	Tube OD Size	Length (in.) C	Length (in.) D	Length (in.) E	Effective Filter Area	LONG INLINE Filter/ Strainer Dimensions	Tube OD Size	Length (in.) C	Length (in.) D	Length (in.) E	Effective Filter Area
	1.5”	15.75	22.25	4.00	0.65		1.5”	4.00	35.38	4.00	0.65
	2.0”	15.75	22.25	4.00	0.65		2.0”	4.00	35.38	4.00	0.65
	2.5”	15.75	22.25	4.50	0.75		2.5”	4.50	35.38	4.50	0.75
	3.0	15.75	22.25	4.50	0.75		3.0	4.50	35.38	4.50	0.75

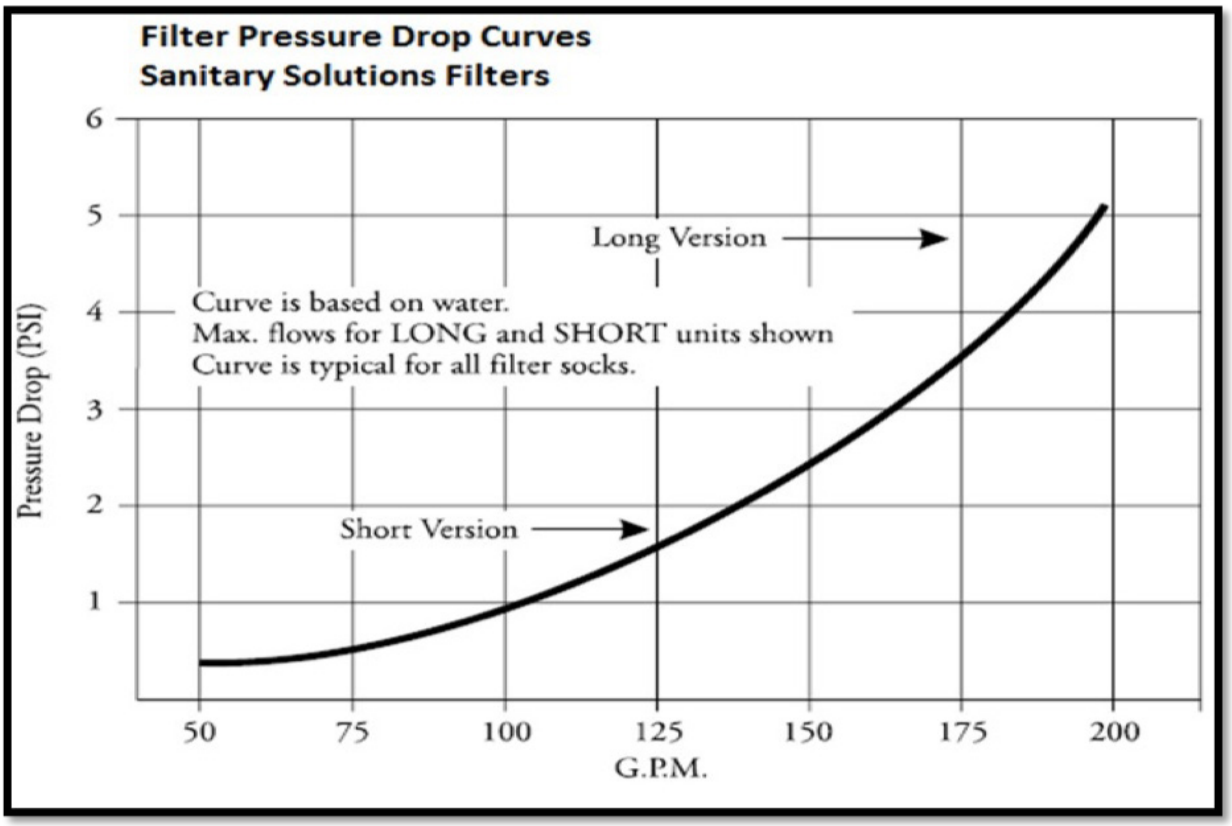
Filter Pressure Drop Curves
Sanitary Solutions Filters
Pressure Drop (PSI)
6
5
4
3
2
1
Long Version
Curve is based on water.
Max. flows for LONG and SHORT units shown
Curve is typical for all filter socks.
Short Version
50
75
100
125
150
175
200
G.P.M.

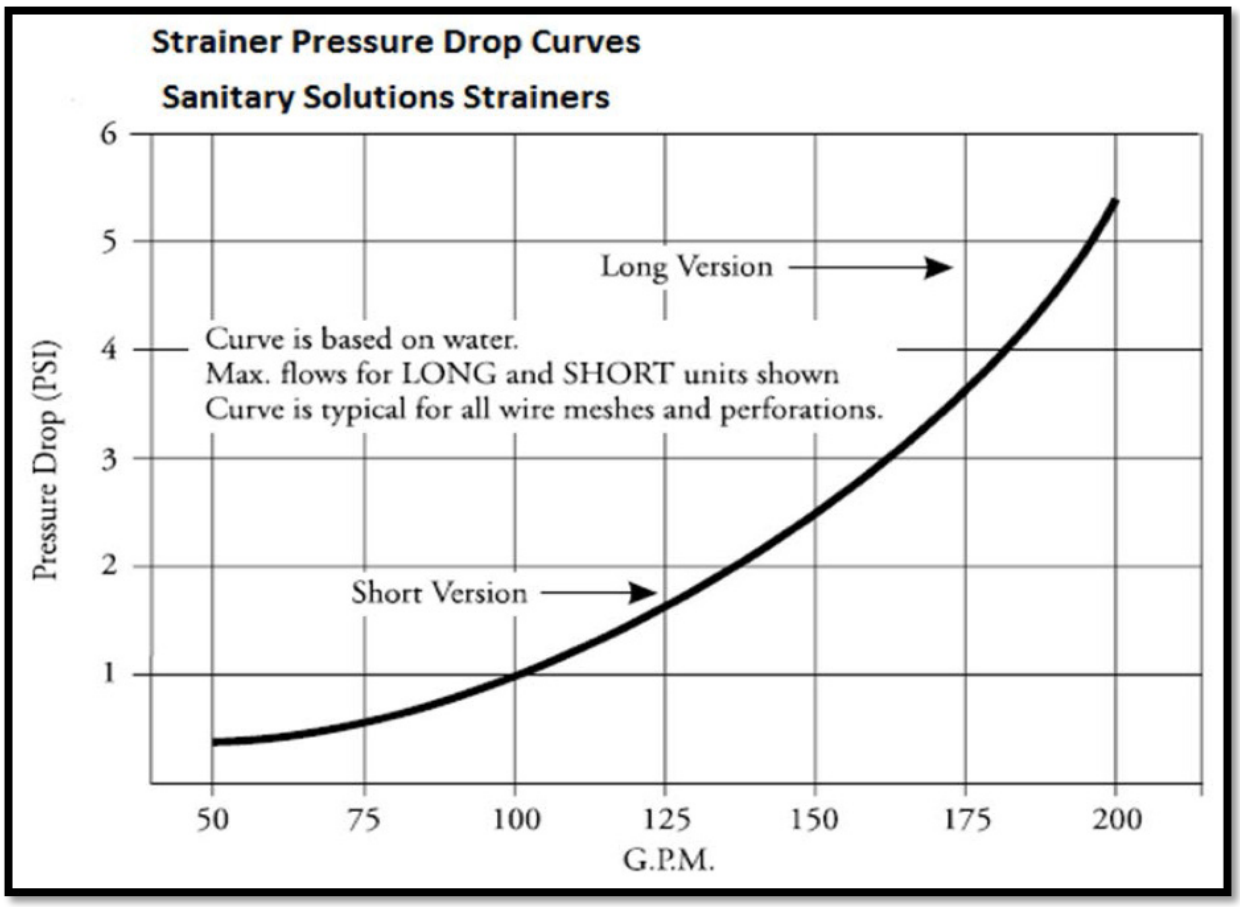
Strainer Pressure Drop Curves
Sanitary Solutions Strainers
Pressure Drop (PSI)
6
5
4
3
2
1
Long Version
Curve is based on water.
Max. flows for LONG and SHORT units shown
Curve is typical for all wire meshes and perforations.
Short Version
50
75
100
125
150
175
200
G.P.M.

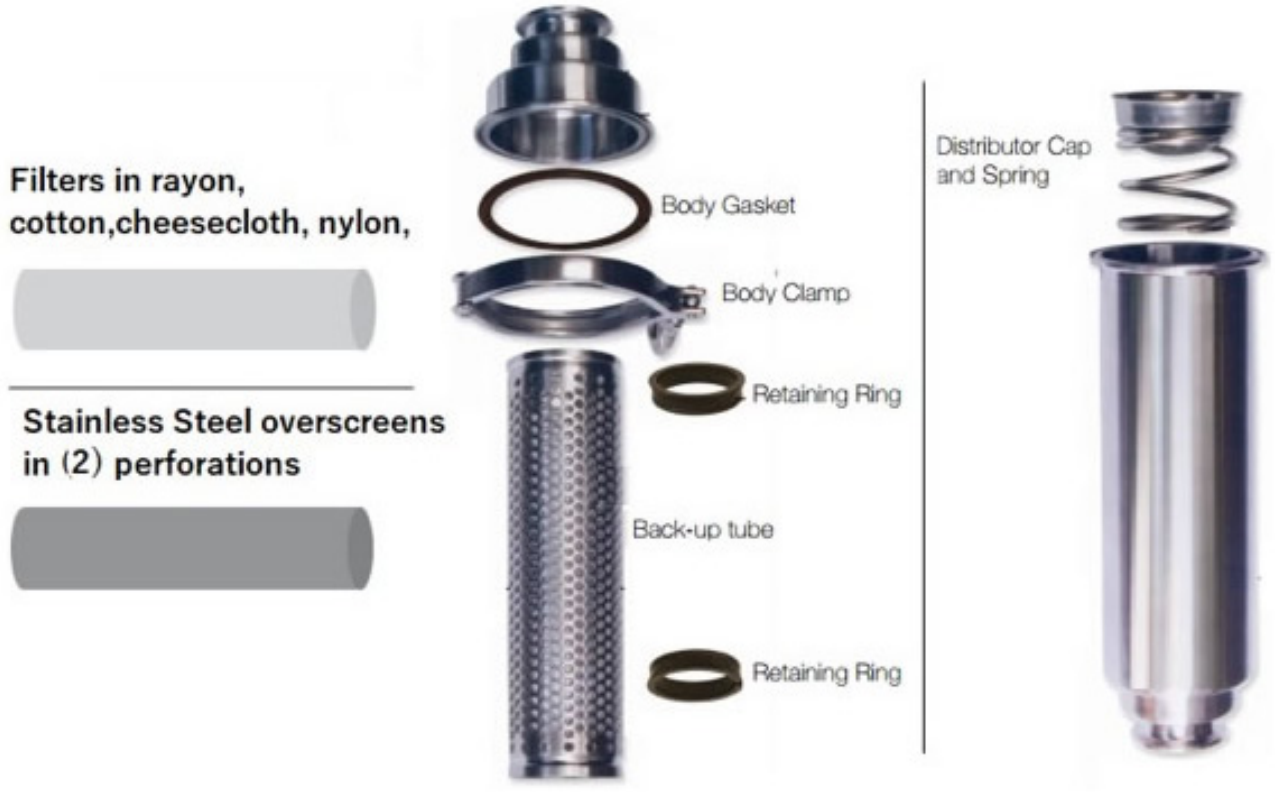
Filters in rayon,
cotton,cheesecloth, nylon,
Stainless Steel overscreens
in (2) perforations
Body Gasket
Body Clamp
Retaining Ring
Back-up tube
Retaining Ring
Distributor Cap
and Spring

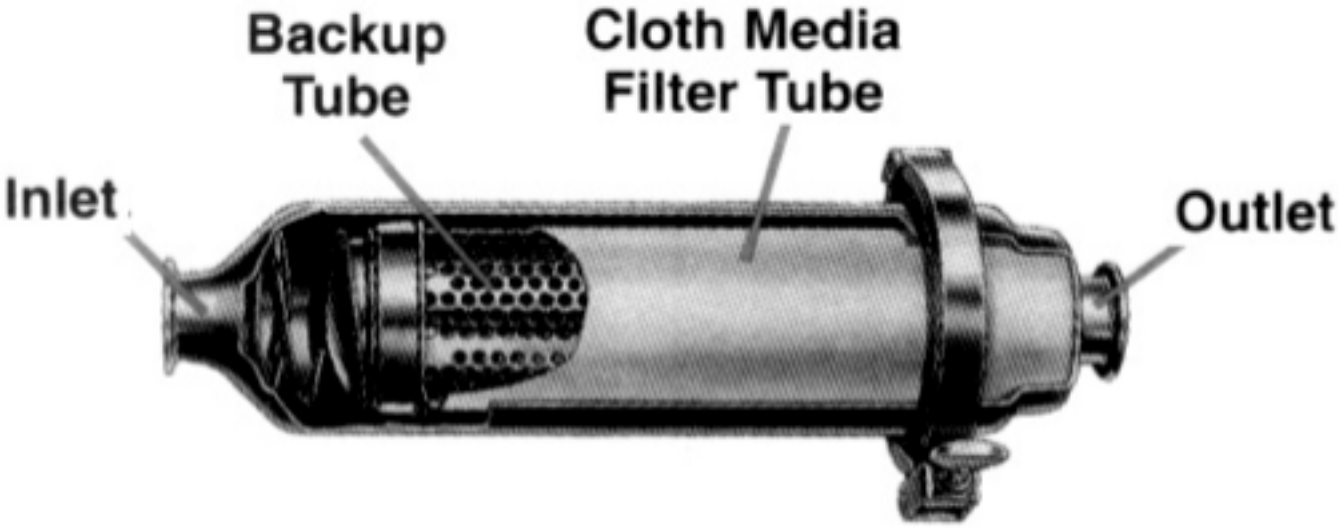
Backup
Tube
Cloth Media
Filter Tube
Inlet
Outlet

WIRE CLOTH MESH SCREENS

Screen part #	Space Between Wires (in.)	Square Mesh	Micron Rating	Percent of open Area
WCMOS-20	0.034	20	864	46.20
WCMOS-30	0.021	30	533	40.80
WCMOS-40	0.015	40	381	36.00
WCMOS-60	0.009	60	229	30.30
WCMOS-80	0.007	80	178	31.40
WCMOS-100	0.006	100	140	30.30

*Note: Sanitary Solutions does not stock all the above sizes, please call us. Not included with base unit.

Single Screened Perforated Metal Strainer

Screen Part #	Port Connections	Gauge	Hole Diameter (in.)	Holes per Square Inch	% of Open area
SSPMS-14-1/4	1.5", 2"	14	¼"/.250	9	58
SSPMS-12-1/4	2.5", 3"	12	¼"/.250	9	58

Note: 1/8"/0.125-hole diameter & 3/32/0.093 perforated back up tubes available upon request

Filter Replacement

Sanitary Solutions Part #	Description	Estimated Micron Rating
NWR-38	Non-Woven Rayon	38
WKCF-513	Woven knapped Cotton Flannel	513
N-765	Cheese Cloth, Single thickness Nylon, 26/29 mesh, rectangular opening, (.025" x.030")	765
NWR-40-42	Non-woven Rayon	40--42
NWR-40	Non-woven Rayon	≤ 40
WN-420	Woven Nylon, 40 Mesh	420

BENEFITS

316L SS Body

Zero Pressure Drop

Compact Design

1.5”, 2”, 3” 4”

(S I Z E S)

1/8” or ¼”

Perforations

(In Stock)

EPDM Gasket (Standard)
Suction Side Installation

Tube OD (SIZE)	A	Tee Length	Weight	Part Number
1.5”	1/8” or ¼”	5.50”	0.63	SSTS-SIZE-1/8-1/4-316L
2”	1/8” or ¼”	7.00”	1.35	SSTS-SIZE-1/8-1/4-316L
2.5”	1/8” or ¼”	7.00”	1.50	SSTS-SIZE-1/8-1/4-316L
3”	1/8” or ¼”	7.50”	2.45	SSTS-SIZE-1/8-1/4-316L
4”	1/8” or ¼”	9.00”	3.80	SSTS-SIZE-1/8-1/4-316L

Note: 1/8” & ¼” Replacement Tee Strainer Inserts are in Stock

Filter/Strainers Answer Sheet

Sanitary Solutions Inline and Side Entry Filters and Strainers T316L are designed to remove particles from your line or from product such as a gas or liquid.
As for the most common questions, take a moment to review:
What is a Filter? A T316L device with a disposable material and specific micron sizes for the removal of smaller or fine particles from a given liquid.
***Note: Filters aren't intended to remove impurities or odors and the disposable material should be removed and sent packing periodically. ***

What is a Strainer? Strainers are cousins to the filters, made to remove the larger particles from a given liquid, and are reusable not disposable which saves the customer.
***Note: Strainers can be supplied with Fine, Medium or coarse straining. In fact, our strainers are interchangeable with other comparable strainers. ***

What are the product applications? Tomato Paste, Puddings, Jams, Baby Foods, Soups, Salad Dressings and Mayonnaise to name a few in the Food Industry. Beer, Yeast, Fruit Concentrates, Soft Drinks, Milk, and Ice Cream in the Beverage and Dairy Industries.
Soaps and Detergents in the Cosmetic Industries. Brine in the Poultry or Meat Industries. Chemicals, Inks, Paints, Photographic Solutions and Resins in the Industrial Community.

We, at Sanitary Solutions, stock a full line of Sanitary Filters and Strainers to meet your needs when they arise. Please feel free to call us at **1-888-909-3569 or 1-855-640-7871** to answer any questions, check stock, and supply you with a strainer that interchanges with other comparable strainers and strainer parts in our industry.

E-Mail Confirmation with Tracking Number to you

SANITARY SOLUTIONS INC.

Bulldog Fittings/Valves...Bulldog Tough.

Sanitary Solutions Valves/Accessories Catalog

AIR BLOW CHECK VALVES

SSABCV-Size-Alloy (Type A)

SSABCV-FNPT-Size-Alloy (B)

SSABCV-RHB-Size-Alloy (Type C)

Air Blow, Y-Ball, Check Valve

Sanitary Solutions stocks:

Sizes: 1.5”—6.00”

Alloy: T316L

Types of Air Blow Check Valves:

EPDM Stem Seat & Gasket

Conforms to 3-A Standards

Type A or with 3/8” Air Line Coupler
Type B with ½” Female NPT Connection
Type C with Rubber Hose Barb Connection

Sanitary Solutions Air Blow Check Valves conform to 3-A practices and are designed to evacuate lines of product or Clean in Place solutions and provide air movement to product in either a tank or other form of vessel.

Air Blow Check Valve Dimensions

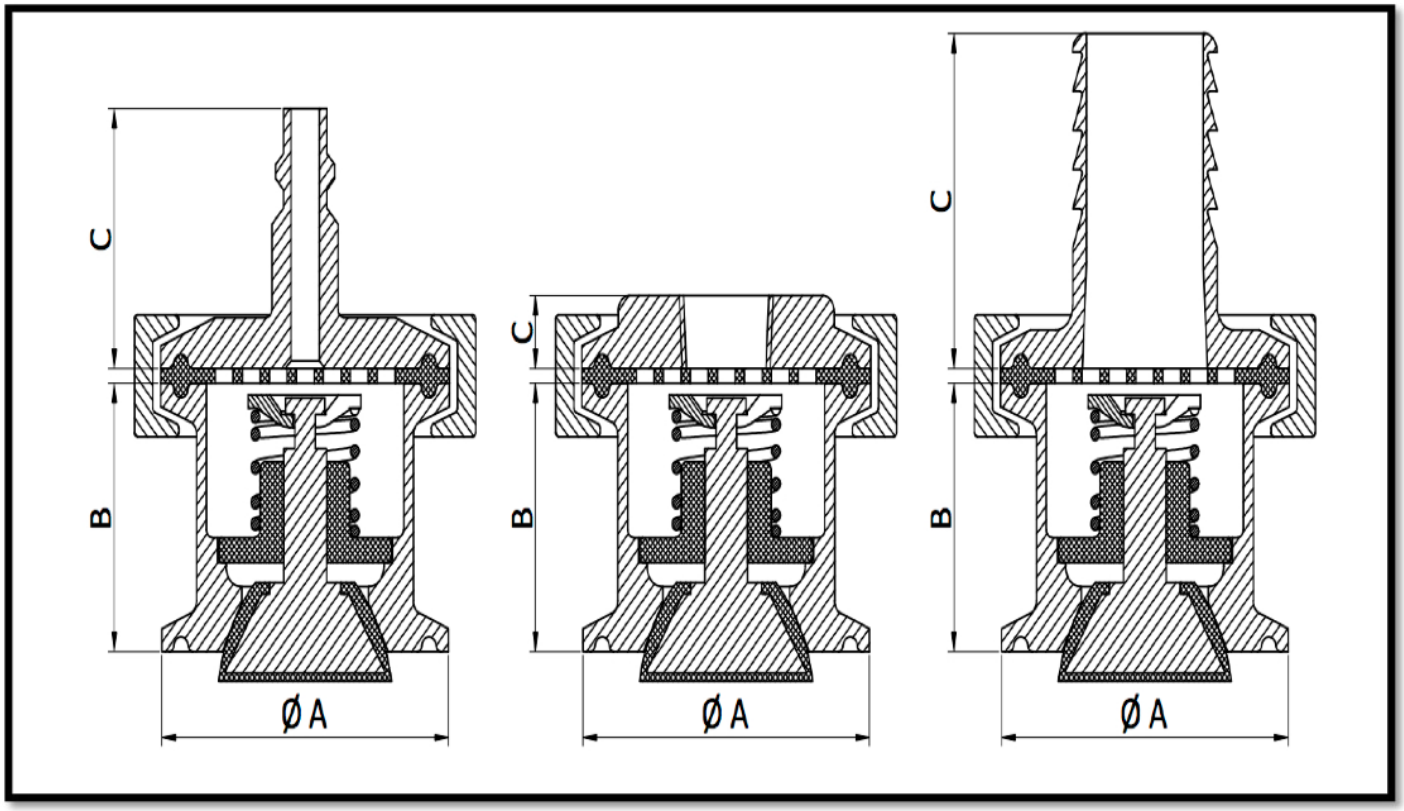

Size	A	B	C (PLUG)	C (FNPT)	C (HOSE BARB)
1 "	1.984" (50.39mm)	1.299" (33.0mm)	1.260" (32.0mm)	0.626" (15.9mm)	1.689" (43.0mm)
1 1/2"	1.984" (50.39mm)	1.299" (33.0mm)	1.260" (32.0mm)	0.626" (15.9mm)	1.689" (43.0mm)
2 "	2.516" (63.91mm)	1.299" (33.0mm)	1.260" (32.0mm)	0.626" (15.9mm)	1.689" (43.0mm)
2 1/2"	3.047" (77.39mm)	1.299" (33.0mm)	1.260" (32.0mm)	0.626" (15.9mm)	1.689" (43.0mm)
3 "	3.579" (90.91mm)	1.299" (33.0mm)	1.260" (32.0mm)	0.626" (15.9mm)	1.689" (43.0mm)
4 "	4.682" (118.92mm)	1.299" (33.0mm)	1.260" (32.0mm)	0.626" (15.9mm)	1.689" (43.0mm)

Air Blow Check Valve Material List

Air Blow Check Valves

Material List

Item	Discription	Material	Quantity
1A	1/4" air line quick connect	316L	1
1B	1/2" NPT cap	316L	1
1C	1" hose barb	316L	1
2	single pin clamp	CF8	1
3	valve body	316L	1
4	perforated disc	EPDM/316L	1
4A	spring retainer	304	1
4B	spring	304	1
4C	stem guide	Nylon	1
4D	stem and plug	EPDM/316L	1

Note: Sanitary Solutions stocks a full line of repair kits consisting of:
1-- T304 SS Spring, 1-- EPDM/316L SS Perforated Disc,1-- Nylon Stem Guide
1-- T304 SS Spring Retainer, 1-- EPDM/316L Stem & Plug

Sanitary Solutions Repair Kit # SSABCV-RK-SIZE

Spring Loaded Check Valve

Size, Alloy & Heat Number

Spring Loaded Check Valve

Capped & Bagged for Protection

Sanitary Solutions stocks T316L, 1/2”— 6” Spring Loaded Check Valves that conform to 3-A practices. Our Spring-Loaded Check Valve is designed to be used when flow in both directions create a problem.

Spring Loaded Check Valves open when pressure below the valve seat is greater than above the valve seat. As the pressure equalizes, the valve closes.

Sanitary Solutions spring loaded check valves have standardized on Viton® Seats/ Seals, full flow plate, and can be serviced in the field easily.

NOTE: When free-draining is required, the Sanitary Solutions check valve must be mounted vertically.

Note: Sanitary Solutions Spring-Loaded Check Valve Part Number Example:

SS45CV-SIZE-316L

Clamp Check Valve Product Specifications

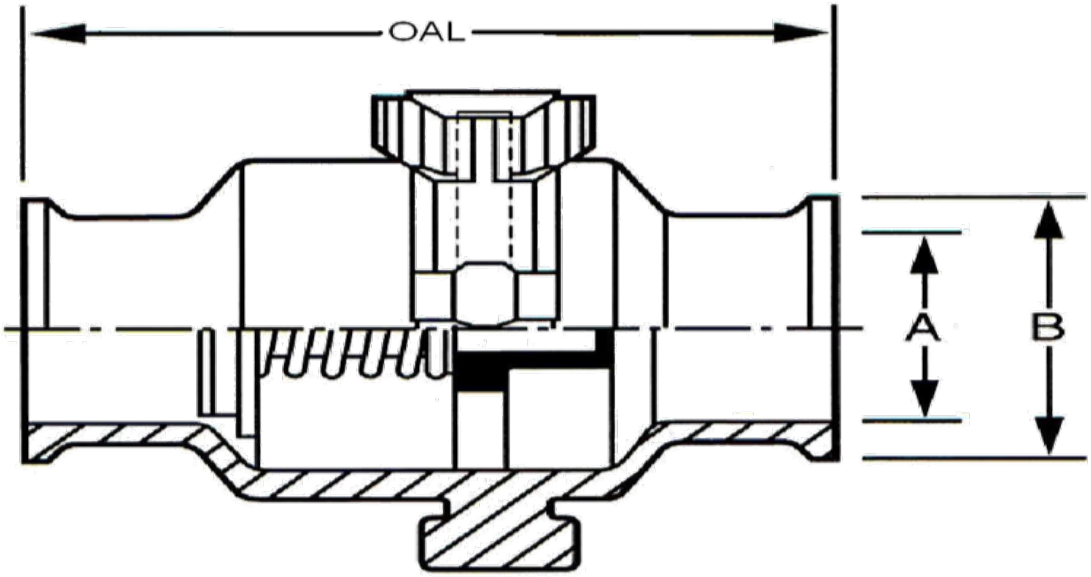

Part Number	SIZE	A	B	OAL	Seat Material	Operating Temperature	Cracking Pressure
SS45CV-0.50-316L	½"	0.370	0.984	3.600	VITON	15° to 145°F	2.6 PSI
SS45CV-0.75-316L	¾"	0.620	0.984	3.600	VITON	15° to 145°F	2.6 PSI
SS45CV-1- 316L	1"	0.870	1.988	3.440	VITON	15° to 145°F	2.6 PSI
SS45CV-1.5- 316L	1.5"	1.370	1.988	3.700	VITON	15° to 145°F	1.0 PSI
SS45CV-2- 316L	2"	1.870	2.519	3.760	VITON	15° to 145°F	1.6 PSI
SS45CV-2.5- 316L	2.5"	2.370	3.051	3.940	VITON	15° to 145°F	0.9 PSI
SS45CV-3- 316L	3"	2.870	3.582	4.190	VITON	15° to 145°F	0.6 PSI
SS45CV-4- 316L	4"	3.834	4.685	5.230	VITON	15° to 145°F	0.5 PSI
SS45CV-6- 316L	6"	5.687	6.625	10.12	VITON	15° to 145°F	0.5 PSI

FEATURES

15°F to 195°F: Operating Temperature
140 PSI: Maximum Operating Pressure
Gasket Meets 3-A Specifications
Viton® Seats & Seals
Field Serviceable

Repair Kits Consist of: (1) each:

Flow Plate, Stem, SS Spring, Viton® Body

Repair Kit Part #
SS45CV-RK-Size

SS45 CV Clamp Check Valve Product Breakdown

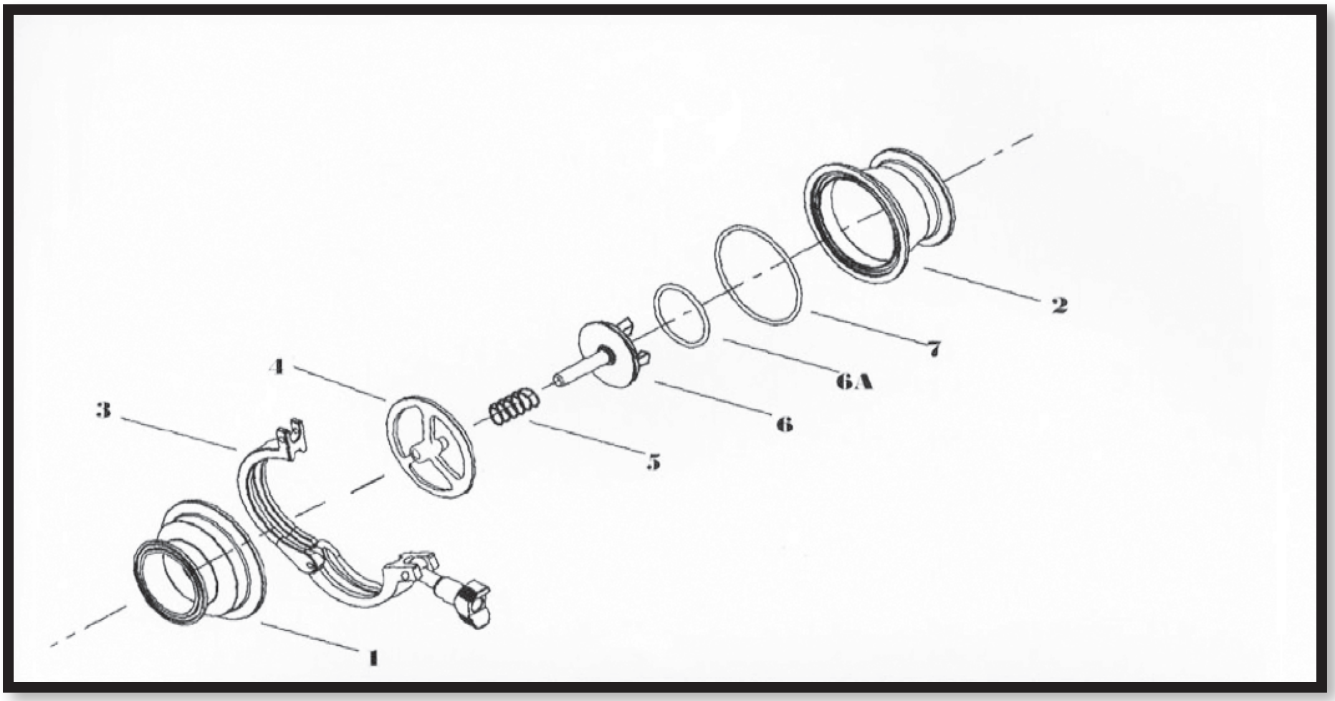

Item #	Description	Material	Qty.
1	Upper Body Housing	CF8M/T316L	1
2	Lower Body Housing	CF8M/T316L	1
3	Single Pin Clamp	304	1
4	Flow Plate	CF8M/T316L	1
5	Spring	304	1
6	Stem	CF8M/T316L	1
6A	Stem O-Ring	Viton®	1
7	Body Gasket	Viton®	1

Sanitary Two- Piece Y-Ball Check Valve

Features:

IN STOCK Sizes: 1.5”, 2”, 2.5”, 3”, 4”

Temperature Range: 15°F to 195°F

Max. Operating Pressure: 145 PSI

No Special Tools

Repair Kits Consist of: (1) each:

Buna Ball & EPDM Gasket

Teflon®, Viton® Ball

Repair Kit Part #

SSYBCV-RK-Size

Note: Sanitary Solutions Two Way Y-Ball Part Number Example:

SSYBCV-SIZE-316L

Sanitary Two Piece Y-Ball Check Valve Product Specifications

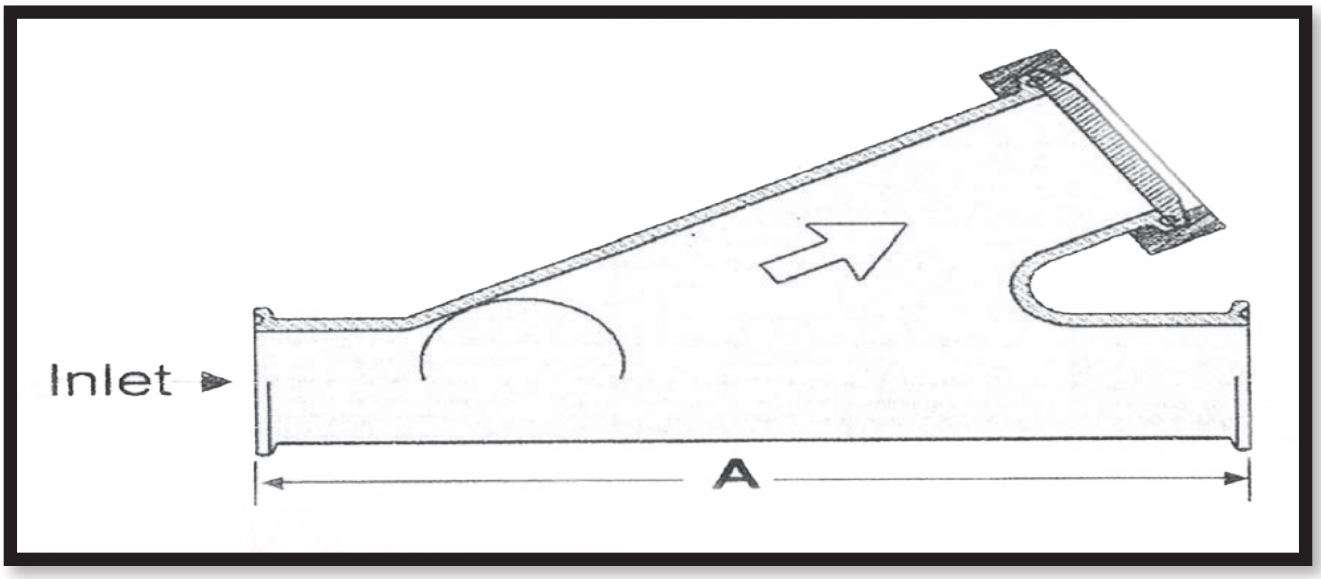

Tube OD (size)	A	Weight	Y-Ball Check Valve Size	Air Blow Check Valve Size
1.5”	8.625”	3.10	1.5”	2”
2”	10.09”	3.33	2”	2.5”
2.5”	11.50”	7.75	2.5”	3”
3”	12.37”	10.25	3”	4”
4”	18.00”	42.10	4”	6”

Sanitary Solutions Y-Ball Check Valves are preferred to be used in vertical applications where product flows bottom to top to gravity seat the ball. For horizontal installations, the curved offset must be upright and perpendicular to the plane of the pipeline for proper seating and free draining.

Arrows on Valve show Flow Direction for proper alignment.

No Expediting Charges/Same Day Shipping

Sanitary Two Piece Y-Ball Check Valve Product Specifications

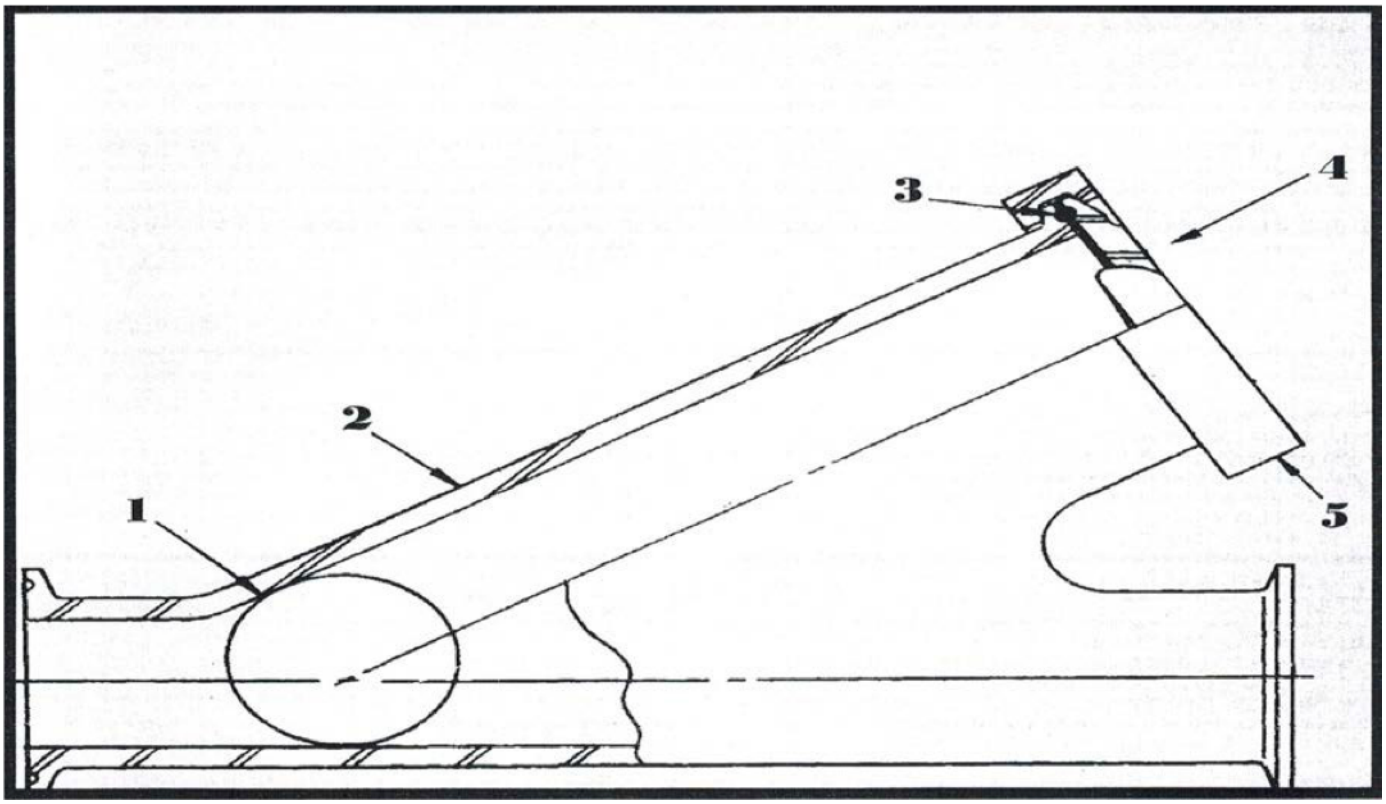

Item #	Description	Material	Quantity
1	Ball	PTFE (Standard)	1
2	Valve Body	T316L	1
3	Gasket	EPDM	1
4	End Cap	T316L	1
5	Clamp	T304	1

Note: We offer a Teflon ball as a standard and a Buna or Viton Ball to meet your application with sizes up to 4".

Sanitary Three Piece Y-Ball Dimensions

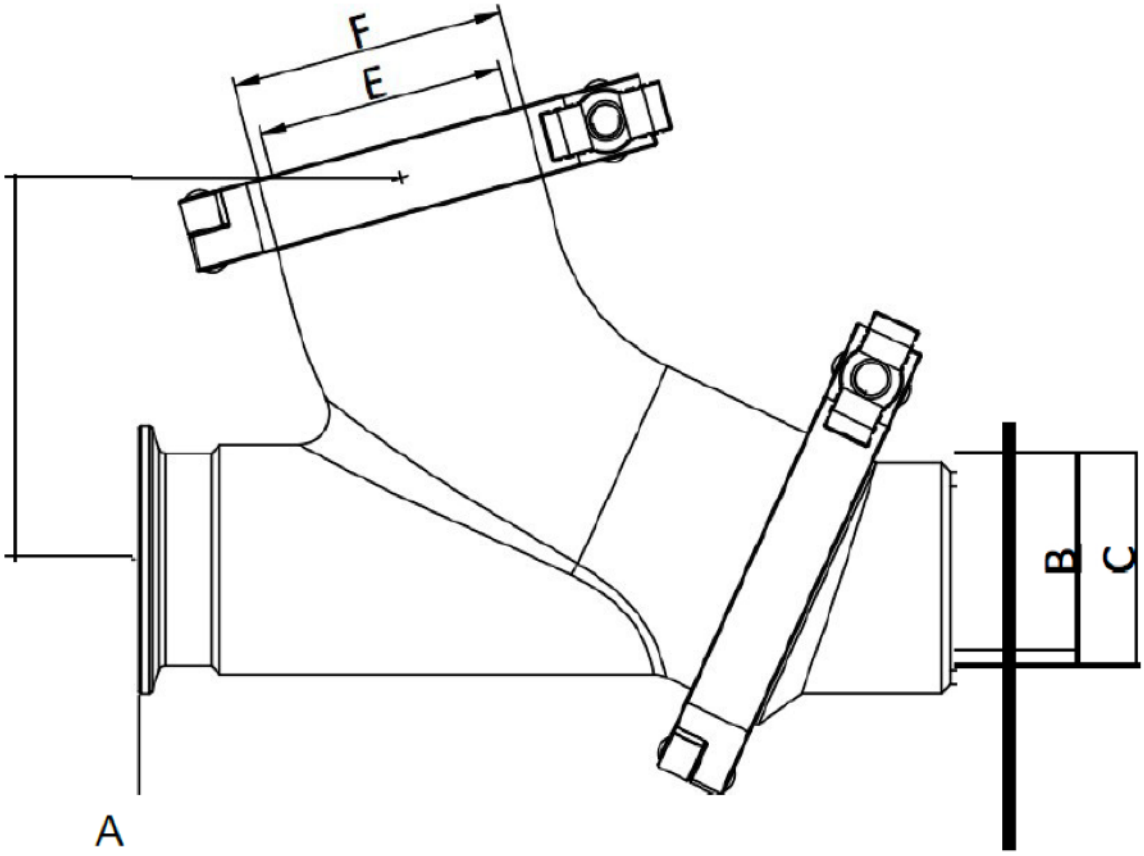

Part #	Size	A	B	C	D	E	F
SSYBCV-D-1.5-316L	1.50”	7.50”	1.37”	1.50”	3.30”	1.90”	2.50”
SSYBCV-D-2-316L	2.00”	8.50”	1.87”	2.00”	3.90”	2.30”	3.00”

Features:

1.5” & 2” Sizes are in Stock
Polished ID & OD to 3-A standards
No special tools, easy cleaning
Replace seat and not entire valve
PTFE BALL for better abrasion/heat resistance

Sanitary Three Piece Y-Ball Material List

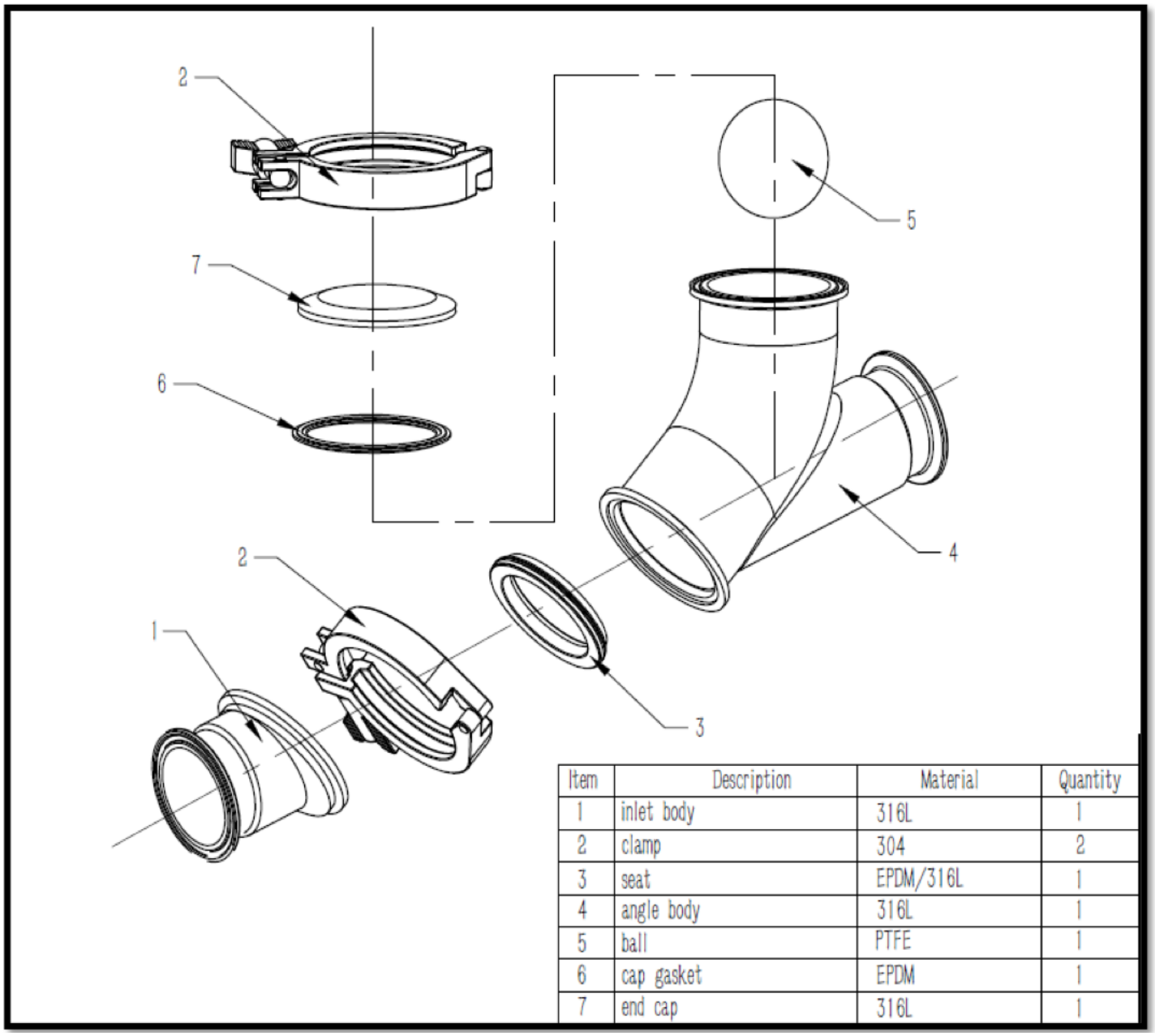

Item	Description	Material	Quantity
1	inlet body	316L	1
2	clamp	304	2
3	seat	EPDM/316L	1
4	angle body	316L	1
5	ball	PTFE	1
6	cap gasket	EPDM	1
7	end cap	316L	1

Sanitary Solutions Repair Kit:

EPDM Gasket & Orfice

Teflon Ball

Note: Sanitary Three Piece Y-Ball Part Number Example:

SSYBCVD-Size-316L

Two-Way Encapsulated (Cavity Filled) Clamp End Ball Valve

Two Way Ball Valve Features:

Sizes: ½" – 6"
ISO 5211 Mount Pad
Padlocking Device
Adjustable Stem Packing
Blow-out Proof Stem Design
Cavity Filled Seat
Hydrostatic Test Pressure:
½"—2"—1500 psi.
21/2"—4" --- 1200 psi.
Heat Number on Valve with MTR's.
Three Piece design for Field Service

Repair Kits Consists of:

P/N: SSEBVC-RK-Size
(2) Valve Seals
(1) Thrust Washer
(3) Stem Packings

Two-Way Encapsulated Clamp End Ball Valve Materials

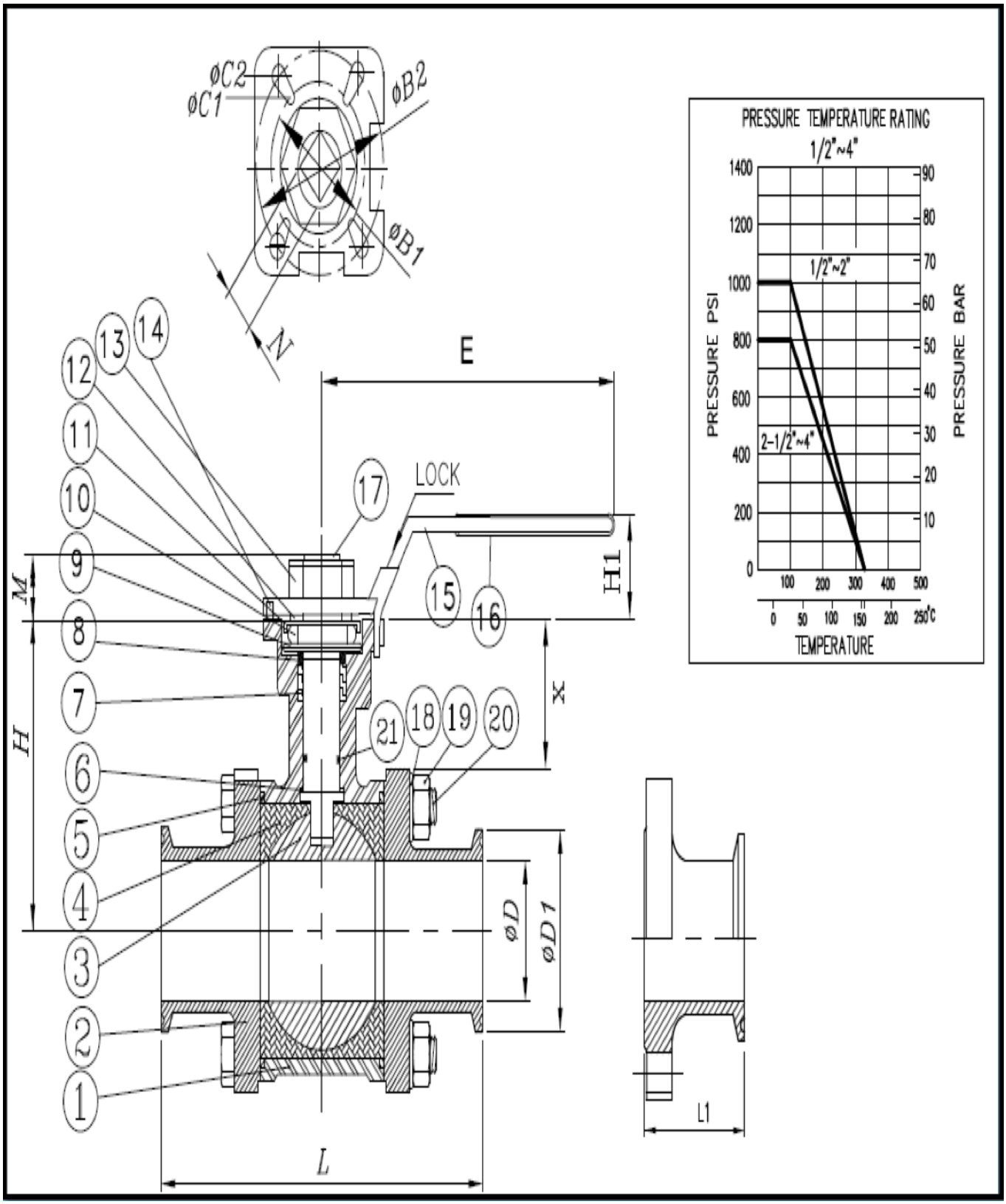

Two-Way Encapsulated Clamp End Ball Valve Materials

ITEM	PARTS	MATERIAL	MATERIAL	QTY
1	BODY	ASTM-A351-CF8M	ASTM-A351-CF3M	1
2	CAP(CLAMP)	ASTM-A351-CF8M	ASTM-A351-CF3M	2
3	BALL	ASTM-A351-CF8M	ASTM-A351-CF3M	1
4	SEAT	PTFE(TF-1641) TFM 1600		2
5	GASKET	PTFE	PTFE	2
6	THRUST WASHER	PTFE	PTFE	1
7	STEM PACKING	PTFE	PTFE	1
8	RING A	AISI-304	AISI-304	2
9	BELLEVILLE WASHER	AISI-304	AISI-304	2
10	STEM NUT	AISI-304	AISI-304	1
11	LOCK WASHER	AISI-304	AISI-304	1
12	RING B	AISI-304	AISI-304	1
13	HANDLE NUT	AISI-304	AISI-304	1
14	STOP PIN	AISI-304	AISI-304	1
15	HANDLE	AISI-304	AISI-304	1
16	PLASTIC COVER	PLASTIC	PLASTIC	1
17	STEM	AISI-316	AISI-316	1
18	BODY WASHER	AISI-304	AISI-304	4,8,12
19	BODY NUT	AISI-304	AISI-304	4,8,12
20	BOLT	AISI-304	AISI-304	4,6
21	0-RING	NBR	VITON	1

Two-Way Encapsulated Clamp End Ball Valve Dimensions

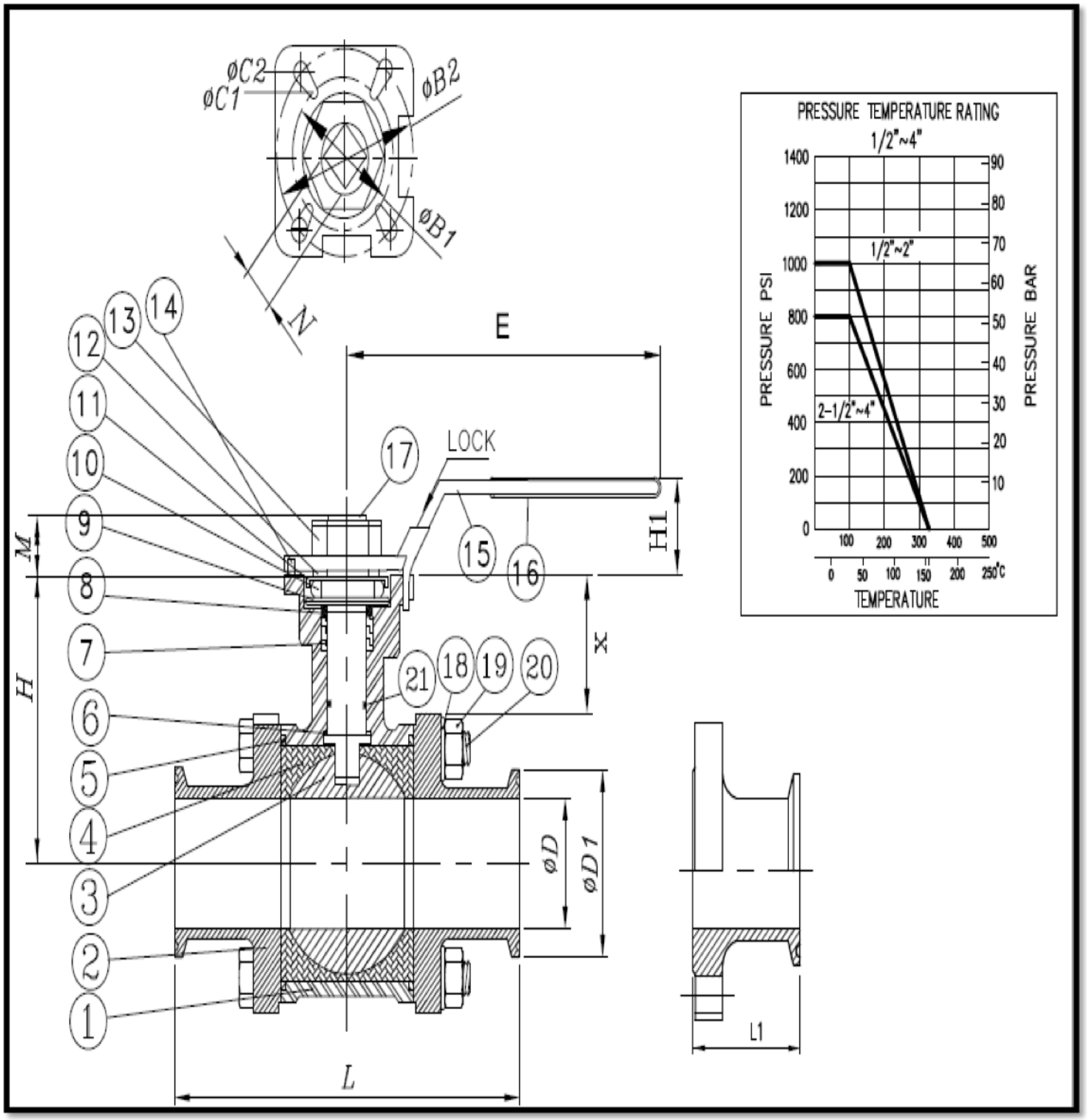

Two-Way Encapsulated Clamp End Ball Valve Dimensions

Size	ISO-5211	¢D	L	H1	¢D1	E	L1	TORQUE IN LBS	Weight
1/2"	F03-F04	0.374	3.504	1.457	1.00	5.629	1.287	90	1.565
3 4"	F03-F04	0.625	3.976	1.850	1.00	5.629	1.437	100	1.984
1"	F04-F05	0.874	4.488	2.252	1.98	6.299	1.575	140	2.844
1-1/2"	F05-F07	1.377	5.512	3.078	1.98	7.362	1.713	240	6.063
2"	F05-F07	1.874	6.142	3.394	2.51	7.362	1.799	480	8.686
2-1/2"	F07-F10	2.205	7.756	4.299	3.05	12.20	2.205	650	18.47
3"	F07-F10	2.874	9.016	4.634	3.58	12.20	2.539	1150	25.26
4"	F10-F12	3.834	9.488	5.559	4.68	15.75	2.386	1400	47.62
6”	F10-F12	5.782	15.50	1.75	6.57	19.68	3.750	2100	93.00

Note: Sanitary Solutions Two Way Ball Valve Part Number Example:

SSEBVC-SIZE-316L

(HOT) High Temperature/Pressure Clamp End Ball Valve

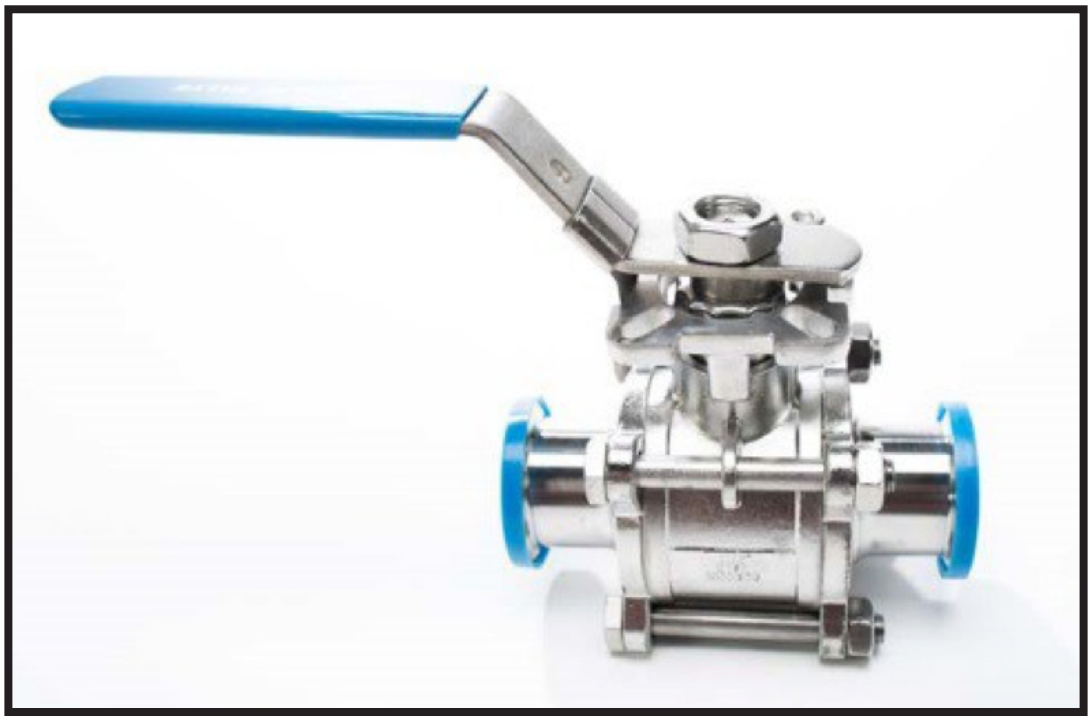

Designed for: High Pressure & Temperature Applications such as steam & thermal fluid

Great for Cooking Oils

Features:

- ISO 5211 Mount Pad
- Full Port Design
- 25% Carbon + 75% PTFE
- Higher Cycle Life than PTFE or RTFE
- Cavity Filled Seat/ Three Piece Design for Field Service
- Lockable Handle
- Live Loaded Stem
- Higher Temperatures

(HOT) High Temperature/Pressure Clamp End Ball Valve Dimensions

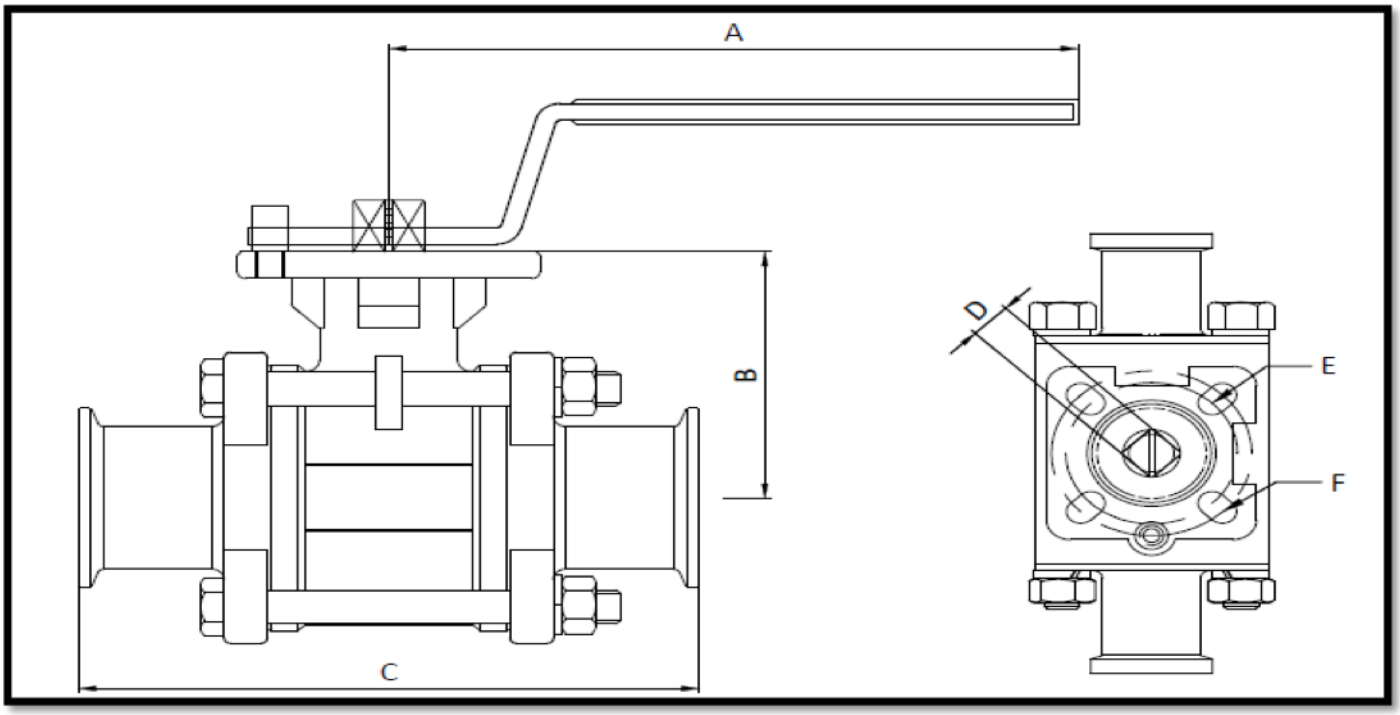

Size	A	B	C	D	E	F	CV	Wt.
½”	4.900	1.500	4.300	0.354	F03	F04	8	
¾”	4.764	1.800	4.700	0.354	F03	F04	29	
1”	5.394	2.100	4.900	0.433	F04	F05	66	
1.5”	7.165	2.700	5.600	0.551	F05	F07	192	5 lbs.
2”	7.165	3.100	6.400	0.551	F05	F07	434	7 lbs.
2.5”	14.57	3.800	7.800	0.669	F07	F10	723	
3”	14.57	4.000	9.000	0.669	F10	F12	1124	
4”	15.75	5.300	9.500	0.866	F10	F12	2100	

Note: Sanitary Solutions High Temperature Pressure Ball Valve Part Number Example:

SSEBVC-CT-SIZE-316L

(HOT) High Temperature Ball Valve Seat Materials Chart

Seat Materials for Ball Valves

Description	Material	Applications
Virgin PTFE	Virgin Polytetrafluoroethylene (Food Grade Material)	100% PTFE GMS standard seat material. Ideal for most of the sanitary solutions. Specified for applications that require a low-effcient of friction.
RTFE	15% Glass Reinforced Tetrafluoroethylene	15% Glass Filled + 85% PTFE Higher temperature and pressure rating compare to PTFE. Specified for applications that require a highre cycle life than PTFE.
25% carbon PTFE	25% Carbon Reinforced Tetrafluoroethylene	25% Carbon Filled + 75% PTFE Specified for high temperature and pressure applications. Higher cycle life than RTFE. Ideal for steam and thermal fluid applications.
Stainless Steel PTFE	50% Stainless Steel Filled Tetrafluoroethylene (Food Grade Material)	50% Stainless Steel + 50% PTFE Specified for higher temperature and pressure applications in a sanitary process.
UHMW	Ultra-high Molecular Weight Polyethylene (Food Grade Material)	Specified for the low modulus of abrasion and minimal property degradation whne explosed to moderate levels of radiation. Ideal for where fluorocarbons are not acceptable.

Pressure Temperature Charts

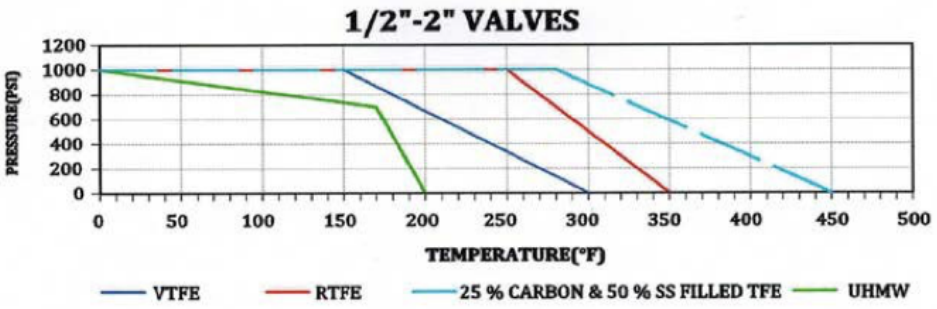

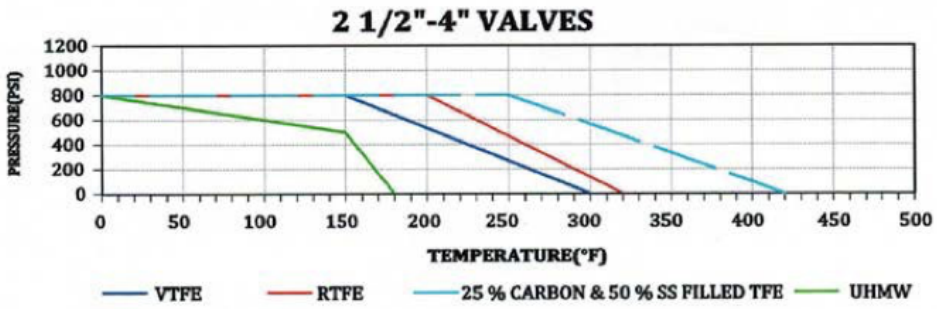

Note: 25% Carbon + 75% PTFE—Higher Temperatures/Pressure Applications & a higher cycle life than PTFE or RTFE

(HOT) High Temperature Ball Valve Seat Materials Chart

Material List

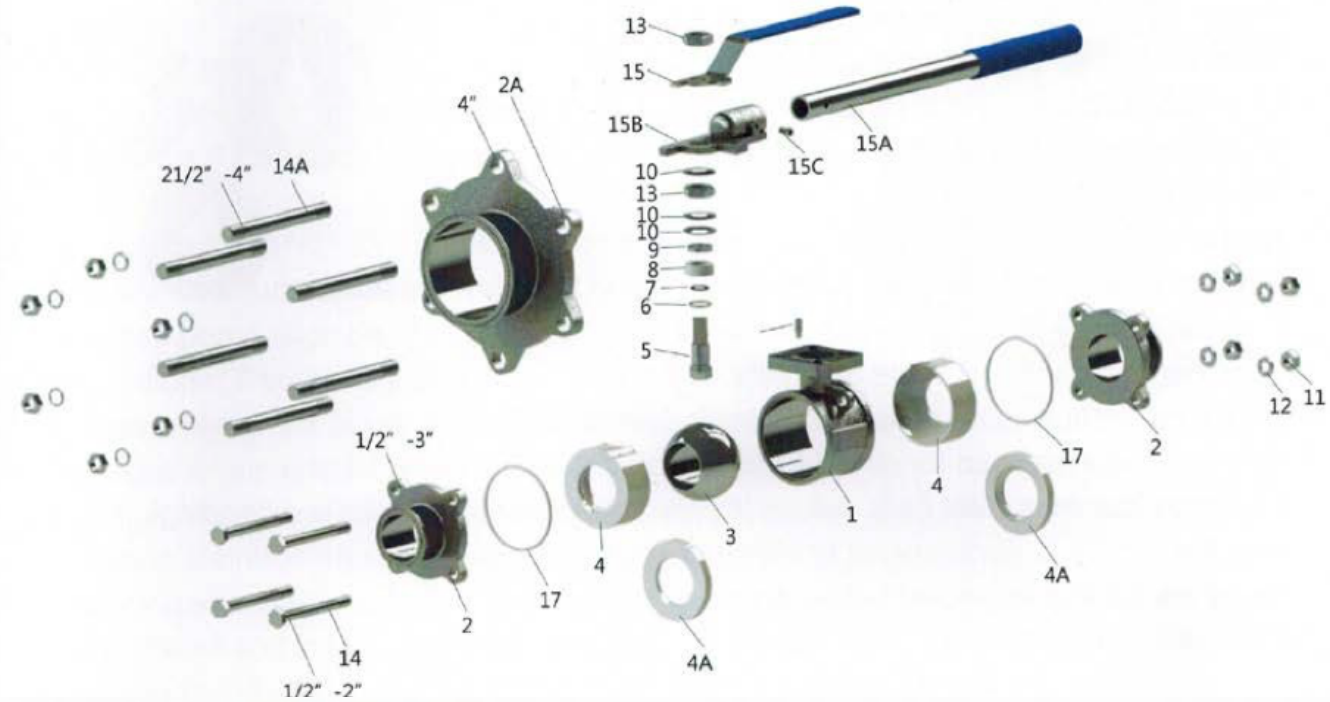

Item	Description	Material	Quantity			
			1/2" - 2"	2 1/2"	3"	4"
1	body	CF8M	1	1	1	1
2	end (4-bolt)	CF8M	2	2	2	n/a
2A	end (6-bolt)	CF8M	n/a	n/a	n/a	2
3	ball	CF8M	1	1	1	1
4	seat (encapsulated)	V, G, C, S, U	2	2	2	2
4A	seat (non-encapsulated)	V, G, C, S, U	2	2	2	2
5	stem	316	1	1	1	1
6	thrust washer	V, G, C, S, U	1	1	1	1
7	O-ring	FKM	1	1	1	1
8	stem packing	V, G, C, S, U	3	3	3	3
9	gland ring	316	1	1	1	1
10	bevel washer	304	3	3	3	3
11	hex nut	304	4	4	8	12
12	bolt washer	304	4	4	8	12
13	nut	304	2	2	2	2
14	bolt	304	4	4	n/a	n/a
14A	bolt (double thread)	304	n/a	n/a	4	6
15	handle	304 / Vinyl	1	n/a	n/a	n/a
15A	handle (rod)	304 / Vinyl	n/a	1	1	1
15B	handle head	304	n/a	1	1	1
15C	handle nut	304	n/a	1	1	1
16	stop pin	316	1	1	1	1
17	body seal	V, G, C, S, U	2	2	2	2

Note: We stock 1.5" and 2" Teflon Ball & Repair Kits

Three Way “L or “T” Port Features

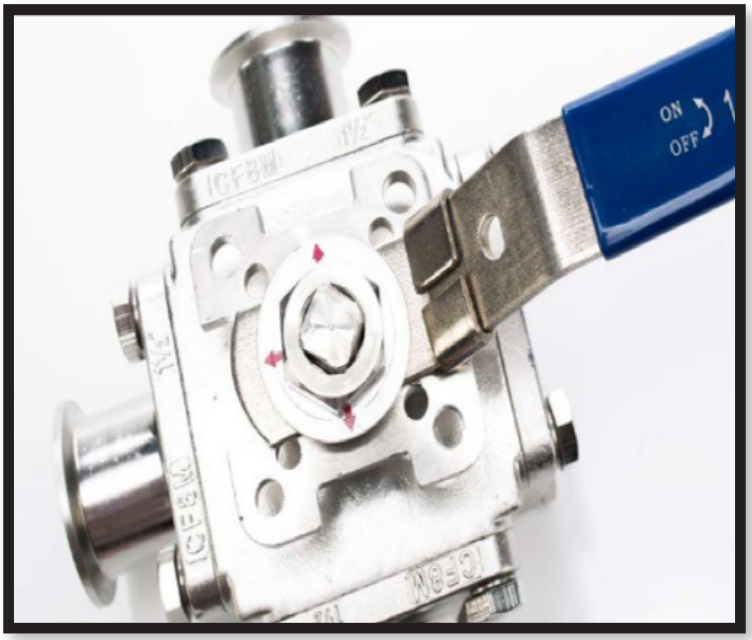

(3) RED ARROWS Indicating FLOW

ISO 5211 Mount Pad/ Locking Handle

Features of the Three Way “L” or “T” Port Ball Valve:

- PTFE Encapsulated Seats
- Polish to a 3-A Standard
- Heat Numbers on Valve
- Capped/Bagged
- Flow Indicators on Top of Valve
- Locking Handle
- ISO 5211 Mount Pad
- Full Traceability
- Clamp Ends (Standard)

Repair Kits available for either three-way valve IN STOCK

Three Way Ball Valve Materials for (Sizes ½”—2”)

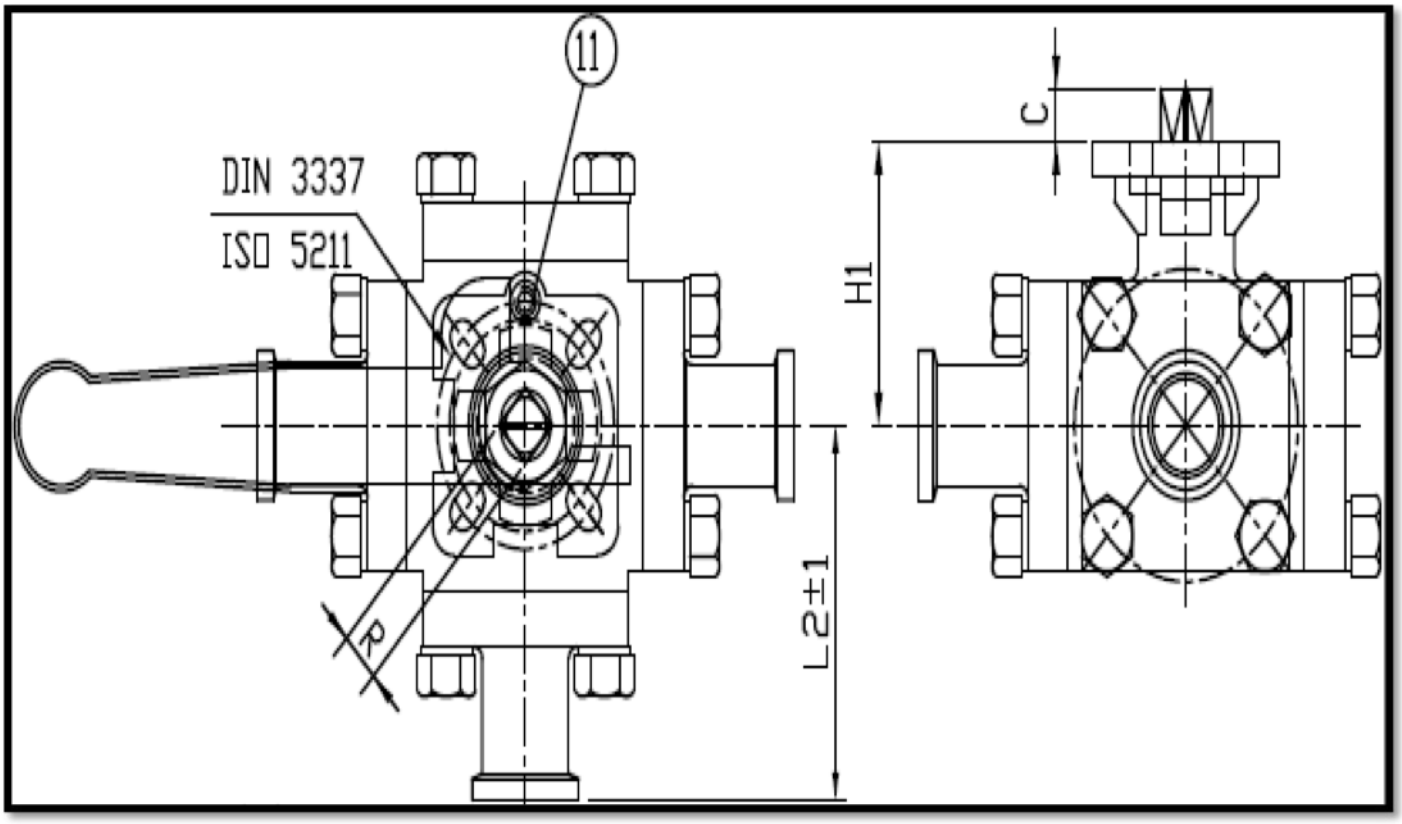

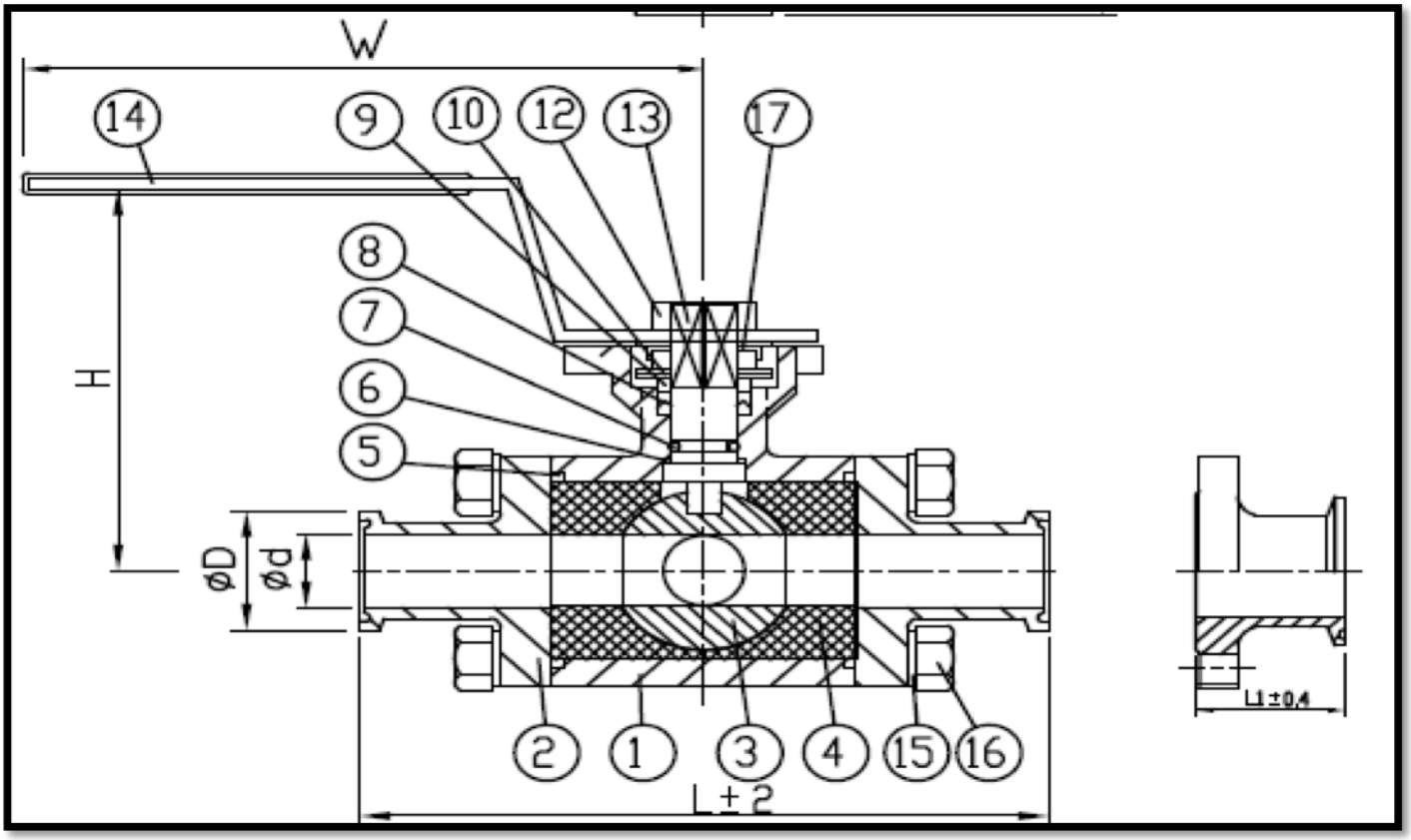

Three Way Ball Valve Materials for Sizes ½”—2”

ITEM	PARTS	CODE	MATERIAL		QTY
1	BODY	SAS-401T-D-BDYxxx	A351-CF8M	A351-CF3M	1
2	CAP(CLAMP)	SAS-401T-D-CAPxxx	A351-CF8M	A351-CF3M	4
3	BALL	SAS-401T-D-BALxxx	A351-CF8M	A351-CF3M	1
4	SEAT	SAS-401T-D-SETxxx	PTFE/TFM-1600		4
5	GASKET	SAS-401T-D-GSKxxx	PTFE	PTFE	2
6	THRUST WASHER	SAS-401T-D-TWSxxx	PTFE	PTFE	1
7	O-RING	SAS-401T-D-ORGxxx	VITON	VITON	1
8	STEM PACKING	SAS-401T-D-STPxxx	PTFE	PTFE	1
9	RING A	SAS-401T-D-RGAxxx	AISI 304	AISI 304	2-3
10	BEVEL WASHER	SAS-401T-D-BVWxxx	AISI 301	AISI 301	2
11	STOP PIN	SAS-401T-D-PINxxx	AISI 304	AISI 304	1
12	NUT	SAS-401T-D-HNUxxx	AISI 304	AISI 304	1
13	STEM	SAS-401T-D-STMxxx	AISI 316	AISI 316	1
14	HANDLE	SAS-401T-D-HDLxxx	AISI 304	AISI 304	1
15	SPRING WASHER	SAS-401T-D-BWSxxx	AISI 304	AISI 304	16
16	BOLT	SAS-401T-D-BOLxxx	AISI 304	AISI 304	16
17	PREVALING DEVICE	SAS-401T-D-PDVxxx	AISI 304	AISI 304	1

O PRESSURE TEMPERATURERATING

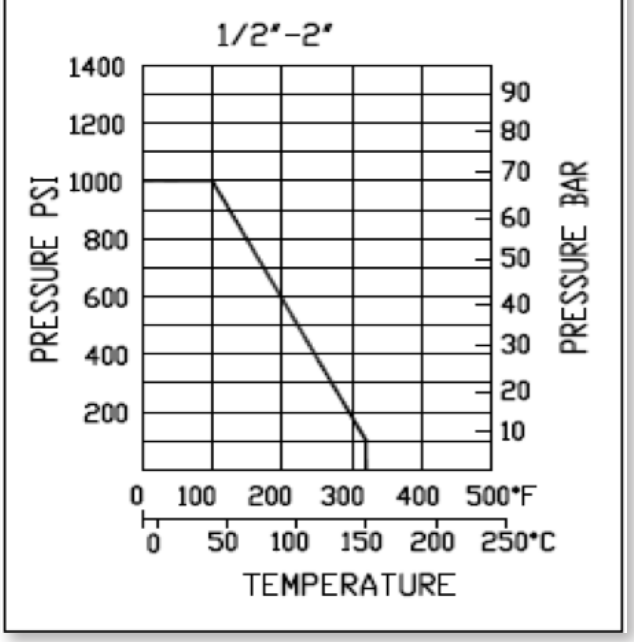

PORT / TYPE	1	2	3	4
L	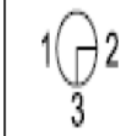	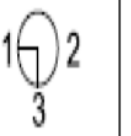	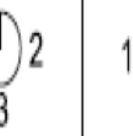	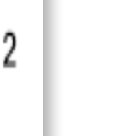
T	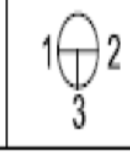	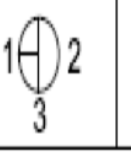	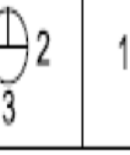	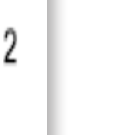

NOTE: The Above Charts refer only to the 1/2”- 2” Three Way Ball Valves.

Three Way Ball Valve Dimensions for (Sizes ½”—2”)

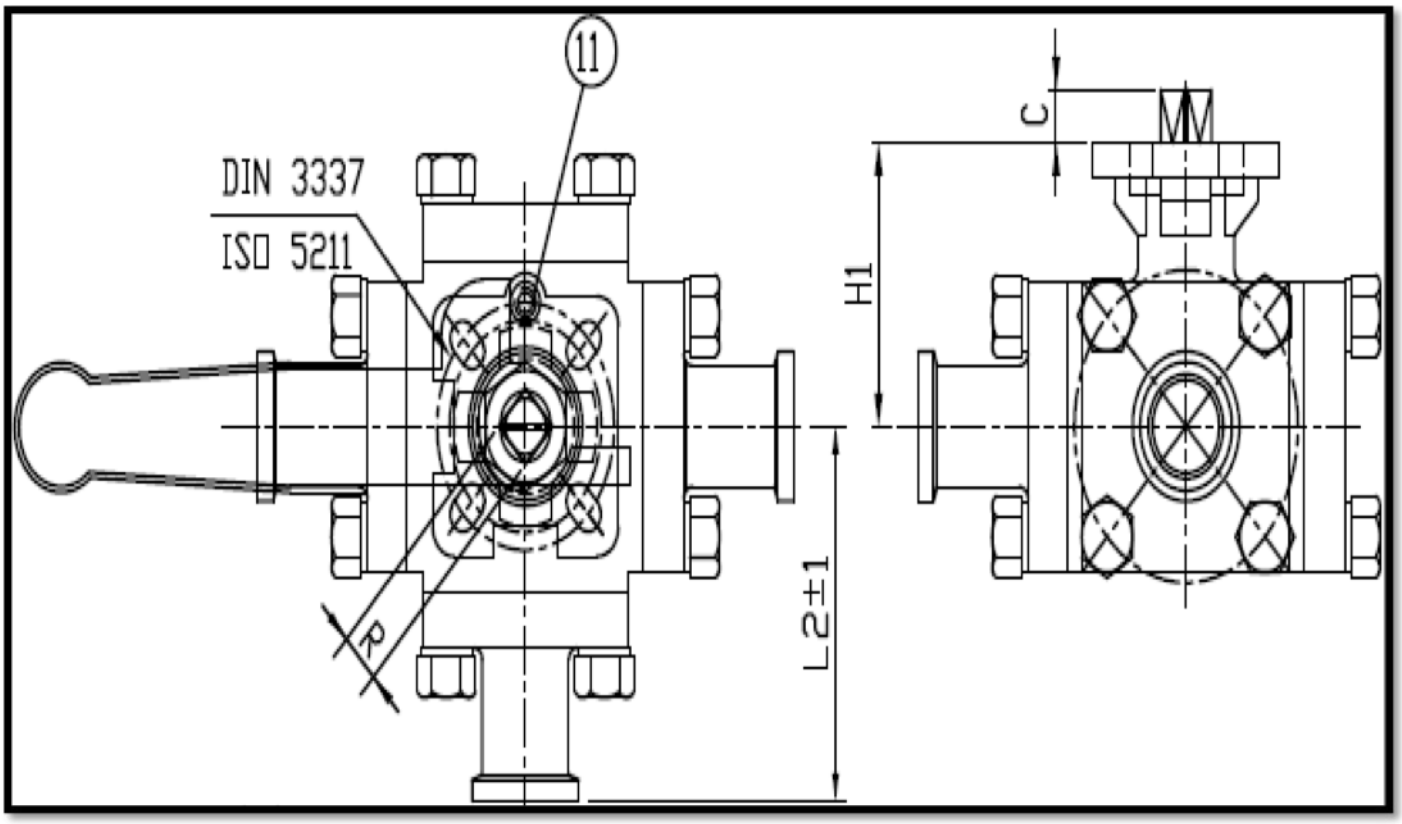

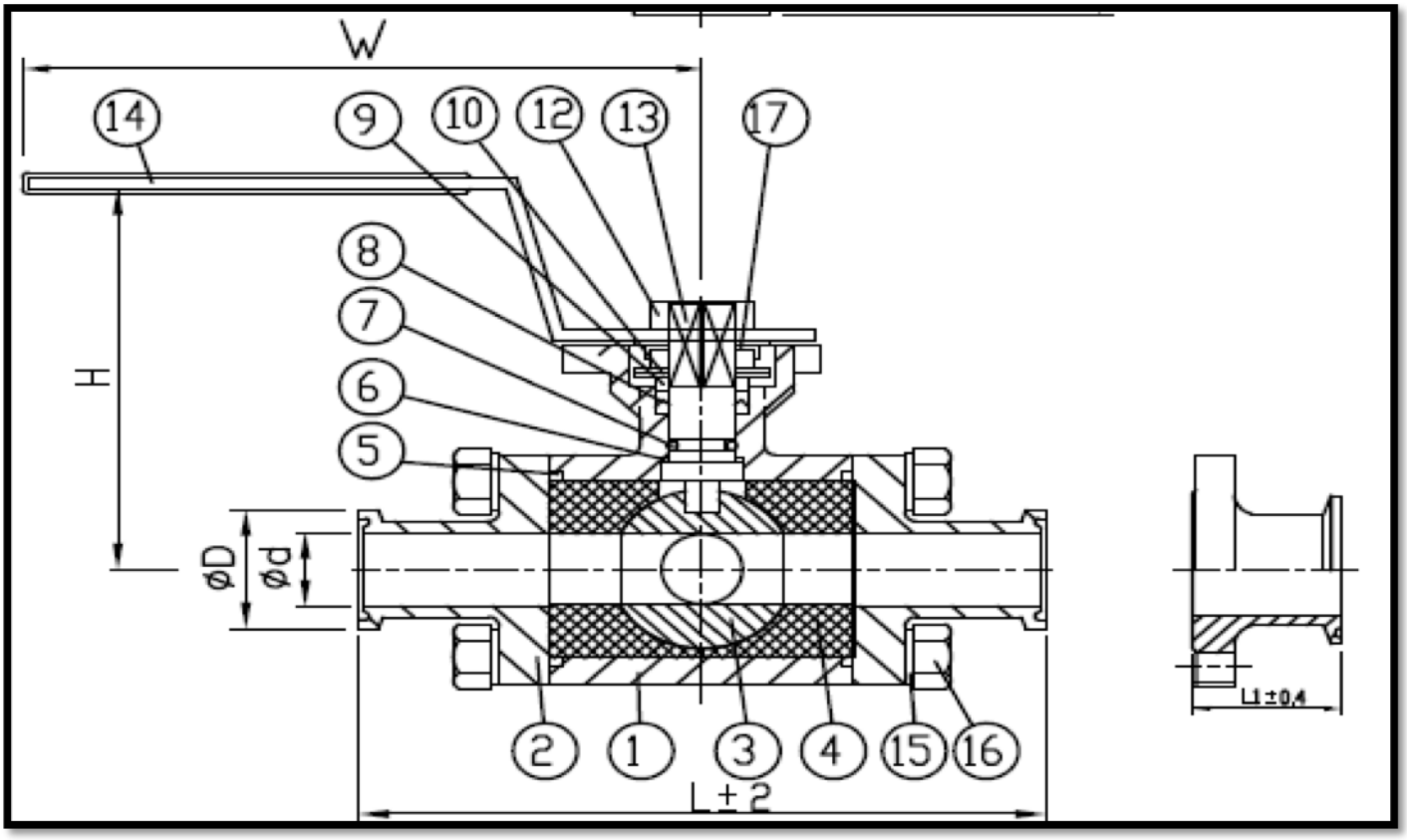

Three Way Ball Valve Dimensions for (Sizes ½”—2”)

SIZE	ISO-5211	W	H	HI	C	R
1/2"	F03/F04	4.764	3.071	1.752	0.354	0.354
3/4"	F03/F04	4.764	3.228	1.889	0.354	0.354
1"	F04/F05	5.394	3.543	2.323	0.433	0.433
1-1/2"	F05/F07	7.165	4.331	2.834	0.551	0.551
2"	F05/F07	7.165	4.516	3.228	0.551	0.551

SIZE	L	L1	L2	¢d	¢D	TORQUE INLB.	Weight L-Port	Weight T-Port
½”	4.646	1.259	2.323	0.374	0.992	95	2.38	2.35
¾”	5.000	1.338	2.480	0.622	0.992	110	2.93	2.88
1”	6.000	1.661	3.000	0.874	1.988	150	7.50	7.00
1.5”	6.889	1.692	3.445	1.378	1.988	350	11.50	11.00
2”	7.480	1.575	3.740	1.874	2.519	708	17.50	15.00

Note: “L” Port Part Number Example When Ordering:

SSEBVC3L- SIZE- 316

Three Way Ball Valve Materials for (Sizes 2½" & 3")

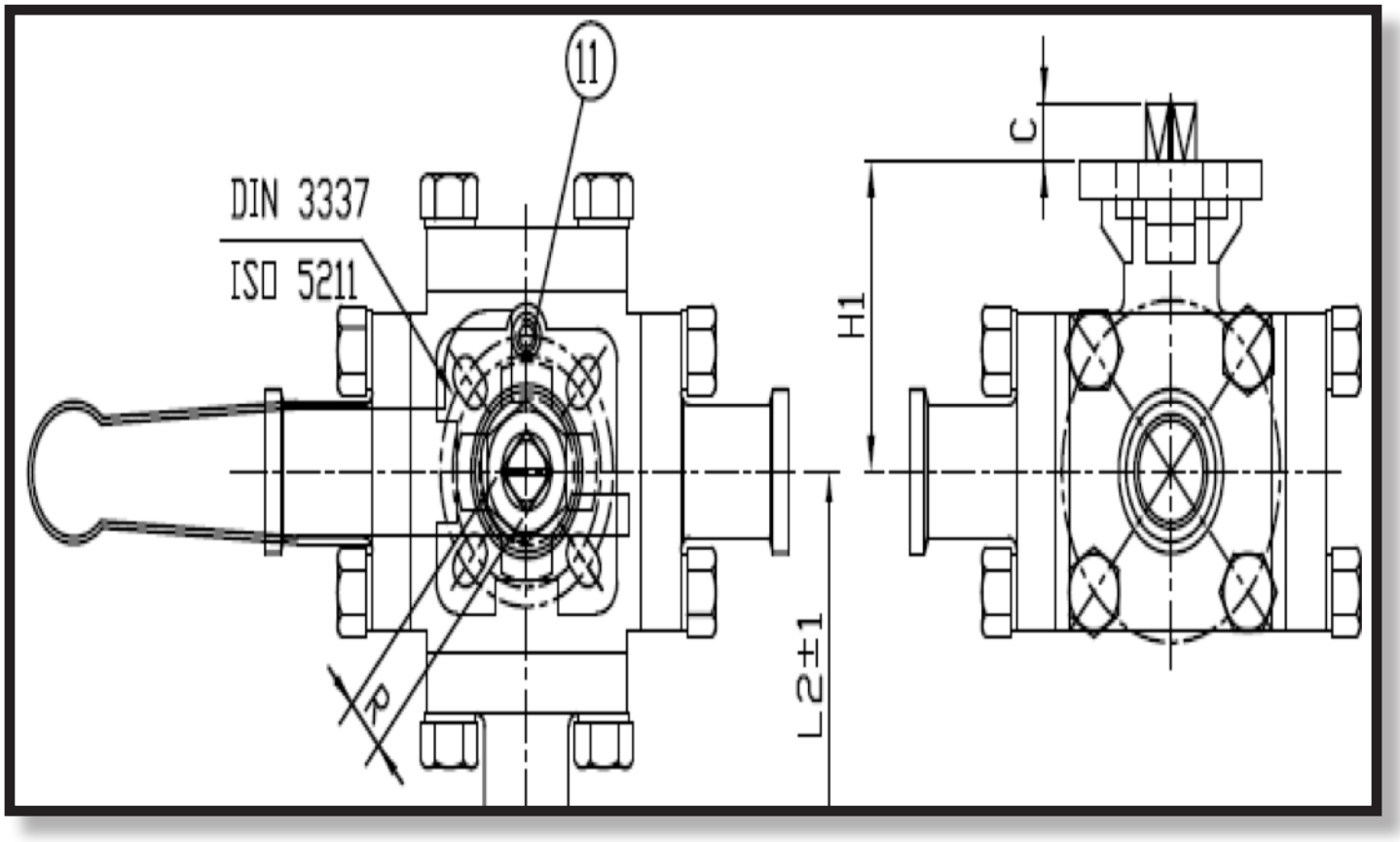

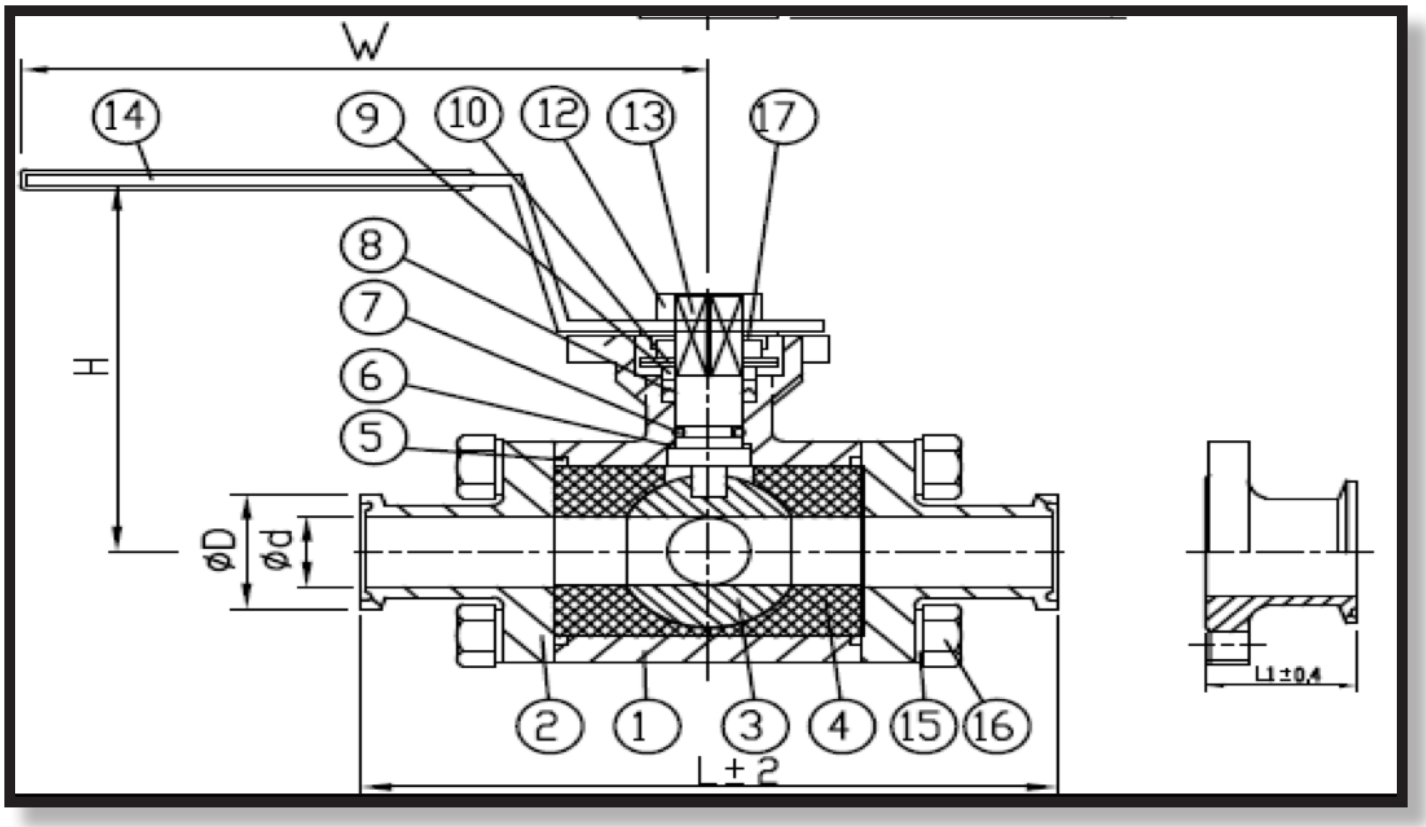

Three Way Ball Valve Materials for (Sizes 2½" & 3")

ITEM	PARTS	CODE	MATERIAL		QTY
1	BODY	SAS-401T-D-BDYxxx	A351-CF8M	A351-CF3M	1
2	CAP(CLAMP)	SAS-401T-D-CAPxxx	A351-CF8M	A351-CF3M	4
3	BALL	SAS-401T-D-BALxxx	A351-CF8M	A351-CF3M	1
4	SEAT	SAS-401T-D-SETxxx	PTFE/TFM-1600		4
5	GASKET	SAS-401T-D-GSKxxx	PTFE	PTFE	2
6	THRUST WASHER	SAS-401T-D-TWSxxx	PTFE	PTFE	1
7	O-RING	SAS-401T-D-ORGxxx	VITON	VITON	1
8	STEM PACKING	SAS-401T-D-STPxxx	PTFE	PTFE	1
9	RING A	SAS-401T-D-RGAxxx	AISI 304	AISI 304	2-3
10	BEVEL WASHER	SAS-401T-D-BVWxxx	AISI 301	AISI 301	2
11	STOP PIN	SAS-401T-D-PINxxx	AISI 304	AISI 304	1
12	NUT	SAS-401T-D-HNUxxx	AISI 304	AISI 304	1
13	STEM	SAS-401T-D-STMxxx	AISI 316	AISI 316	1
14	HANDLE	SAS-401T-D-HDLxxx	AISI 304	AISI 304	1
15	SPRING WASHER	SAS-401T-D-BWSxxx	AISI 304	AISI 304	16
16	BOLT	SAS-401T-D-BOLxxx	AISI 304	AISI 304	16
17	PREVALING DEVICE	SAS-401T-D-PDVxxx	AISI 304	AISI 304	1
18	HANDLE SCREW	SAS-401T-D-HSCxxx	AISI 304	AISI 304	1

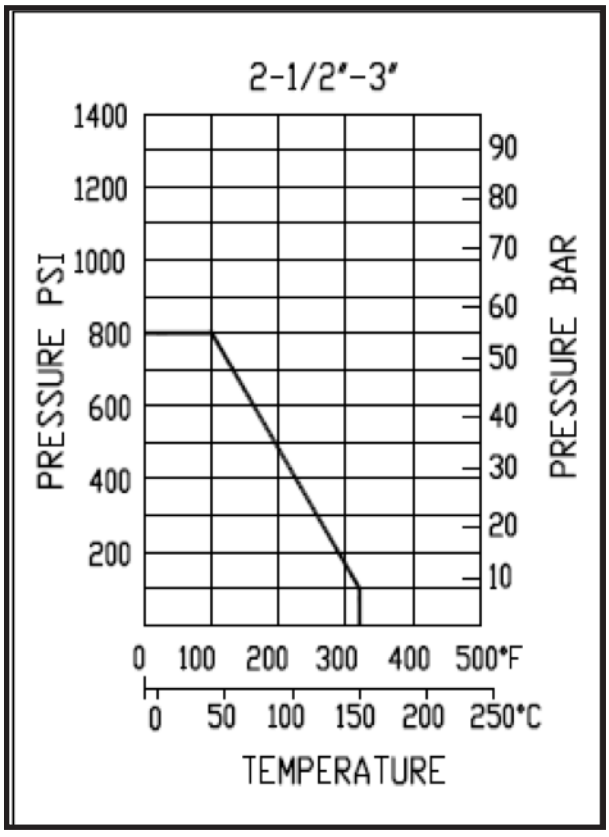

PORT / TYPE	1	2	3	4
L		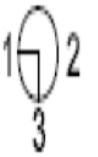	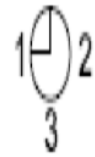	
T				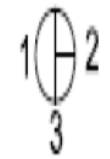

NOTE: The Above Charts refer only to the 2.5" & 3" Three Way Ball Valves.

Three Way Ball Valve Dimensions for (Sizes 2½" & 3")

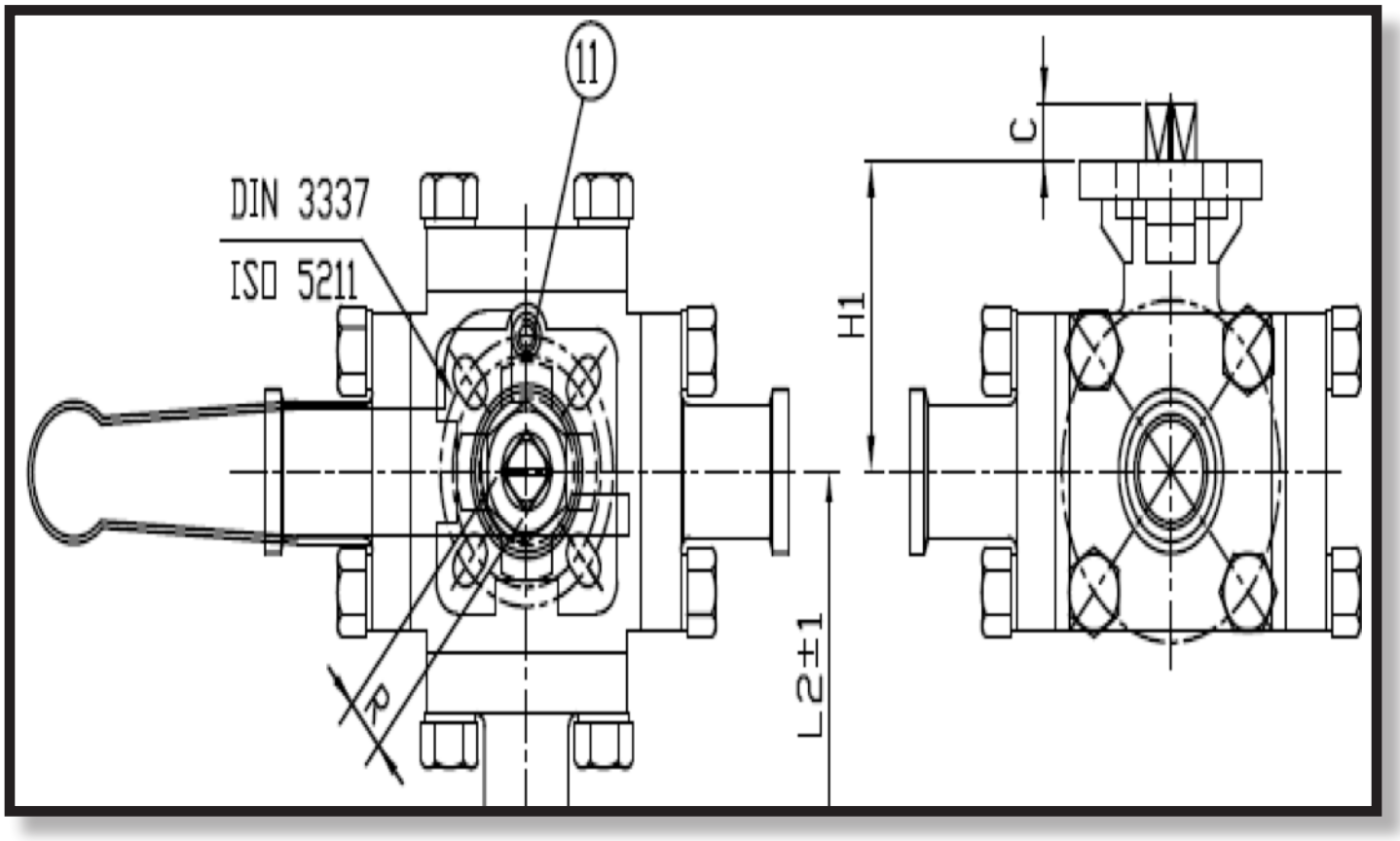

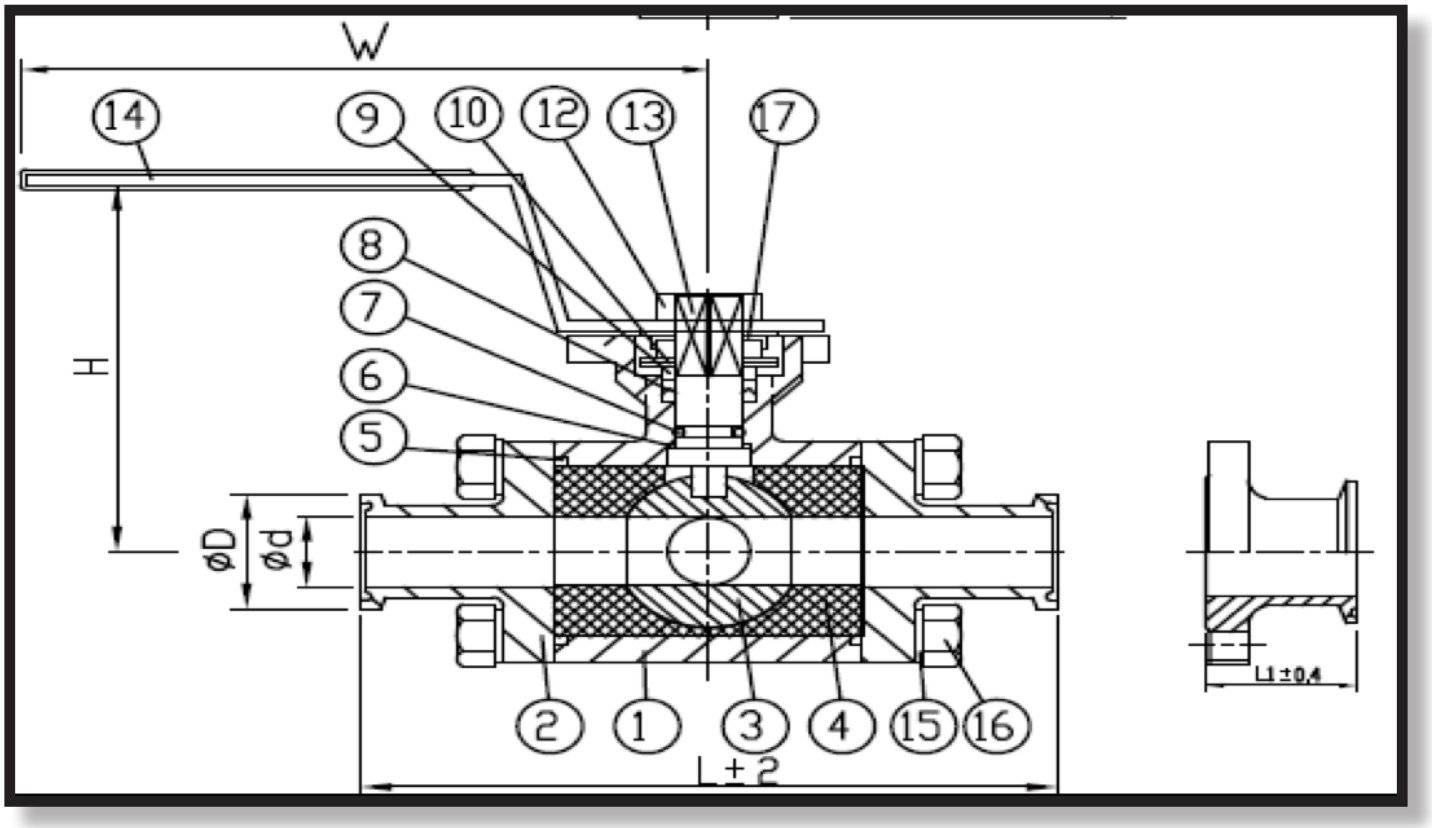

Three Way Ball Valve Dimensions for (Sizes 2½" & 3")

Size	ISO-5211	W	H	H1	C	R	L
2.5"	F07/F10	14.57	4.252	3.937	0.669	0.669	8.976
3.0"	F10/12	15.75	5.275	4.941	0.905	0.866	10.24

SIZE	L1	L2	¢d	¢D	Torque in lbs.	Weight L-Port	Weight T-Port
2.5"	2.055	4.200	2.370	3.051	1060	26.50	25.00
3.0"	2.165	4.803	2.874	3.583	1750	49.00	46.00

Note: "L" Port Part Number Example When Ordering:

SSEBVC3L-SIZE-ALLOY

No Expediting Charges/ Same Day Shipping

Three Way Ball Valve Materials for (4" SIZE)

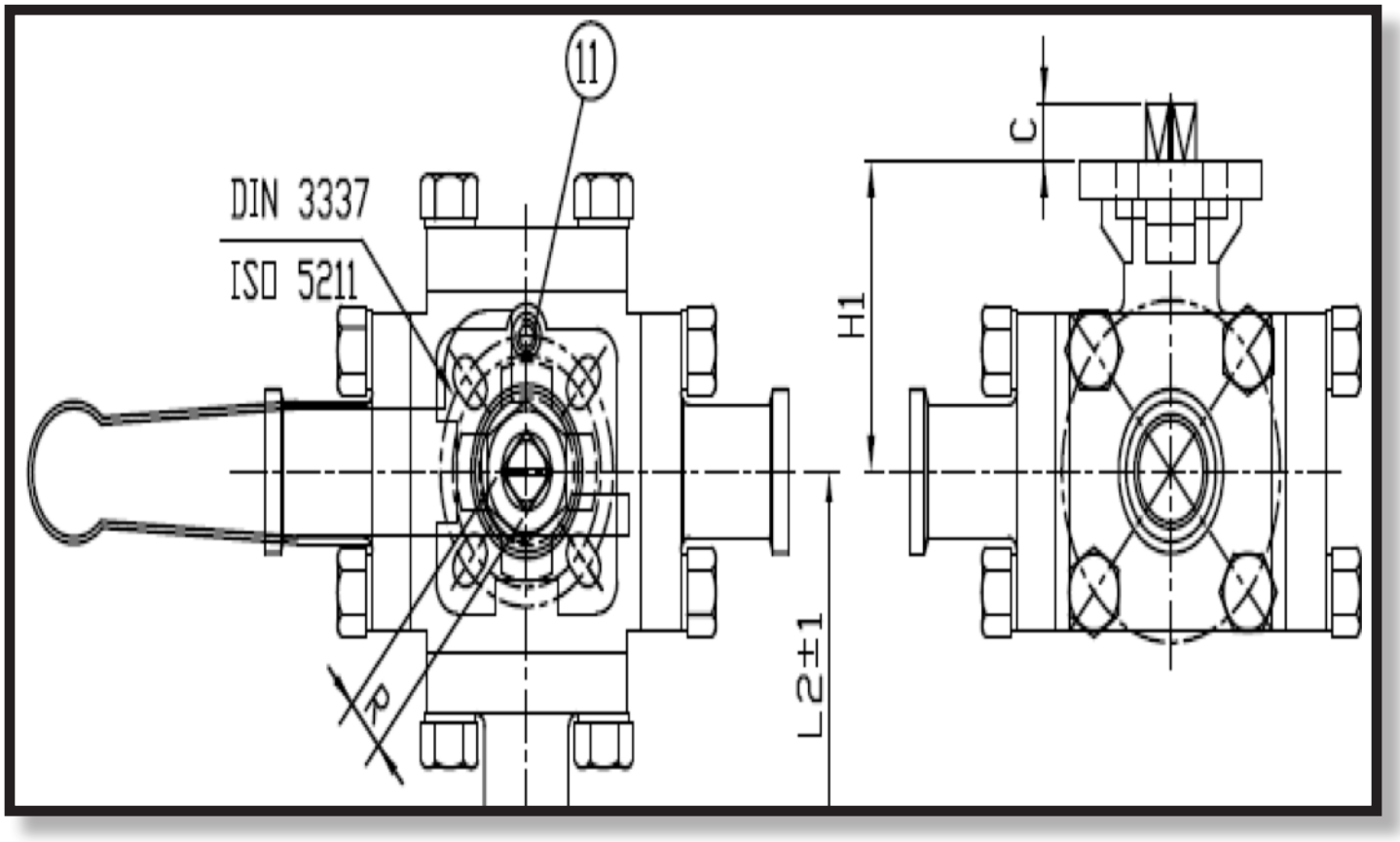

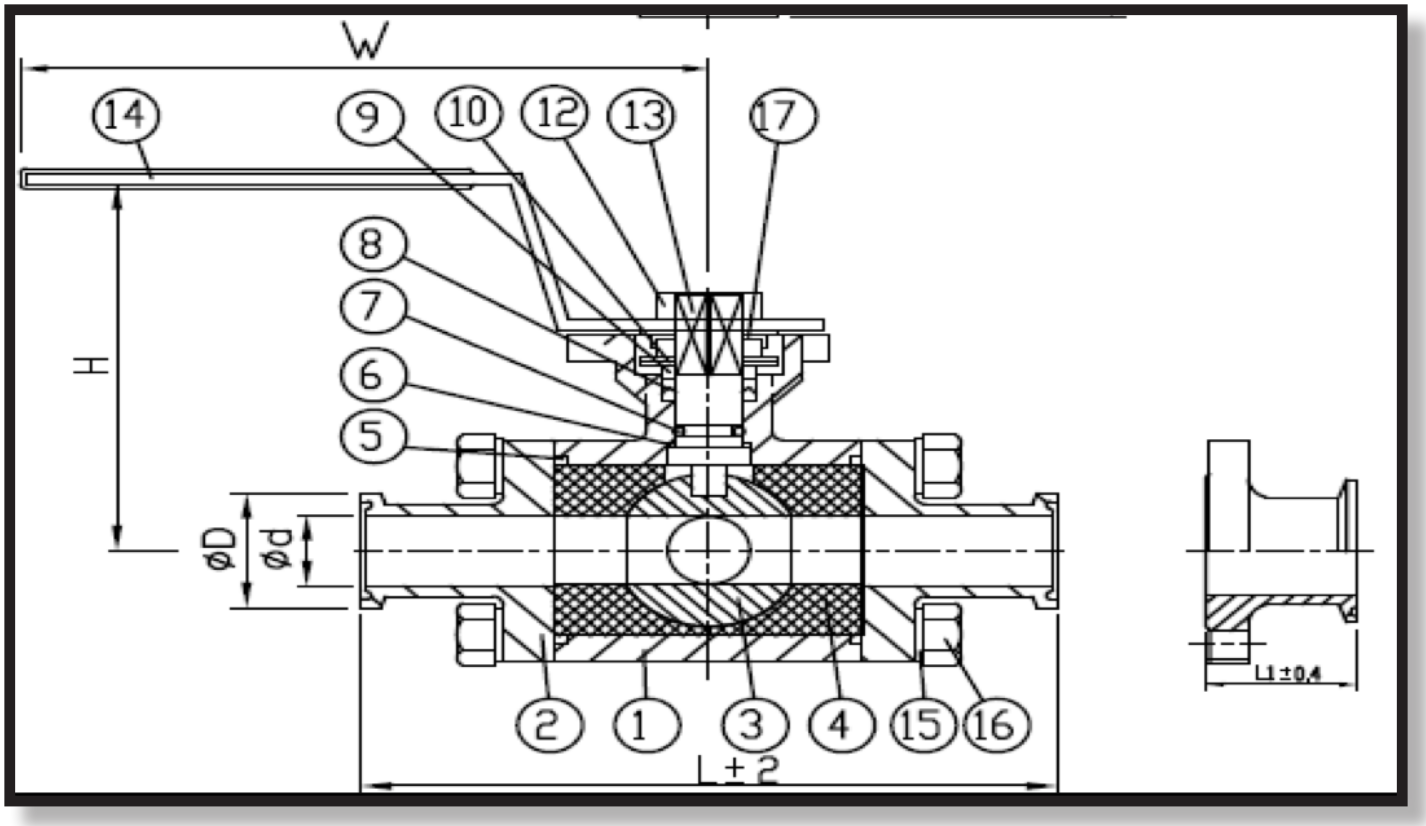

Three Way Ball Valve Materials for (4" SIZE)

ITEM	PARTS	CODE	MATERIAL		QTY
1	BODY	SAS-401T-D-BDYxxx	A351-CF8M	A351-CF3M	1
2	CAP(CLAMP)	SAS-401T-D-CAPxxx	A351-CF8M	A351-CF3M	4
3	BALL	SAS-401T-D-BALxxx	A351-CF8M	A351-CF3M	1
4	SEAT	SAS-401T-D-SETxxx	PTFE/TFM-1600		4
5	GASKET	SAS-401T-D-GSKxxx	PTFE	PTFE	2
6	THRUST WASHER	SAS-401T-D-TWSxxx	PTFE	PTFE	1
7	O-RING	SAS-401T-D-ORGxxx	VITON	VITON	1
8	STEM PACKING	SAS-401T-D-STPxxx	PTFE	PTFE	1
9	RING A	SAS-401T-D-RGAxxx	AISI 304	AISI 304	2-3
10	BEVEL WASHER	SAS-401T-D-BVWxxx	AISI 301	AISI 301	2
11	STOP PIN	SAS-401T-D-PINxxx	AISI 304	AISI 304	1
12	NUT	SAS-401T-D-HNUxxx	AISI 304	AISI 304	1
13	STEM	SAS-401T-D-STMxxx	AISI 316	AISI 316	1
14	HANDLE	SAS-401T-D-HDLxxx	AISI 304	AISI 304	1
15	SPRING WASHER	SAS-401T-D-BWSxxx	AISI 304	AISI 304	16
16	BOLT	SAS-401T-D-BOLxxx	AISI 304	AISI 304	16
17	PREVALING DEVICE	SAS-401T-D-PDVxxx	AISI 304	AISI 304	1
18	HANDLE SCREW	SAS-401T-D-HSCxxx	AISI 304	AISI 304	1

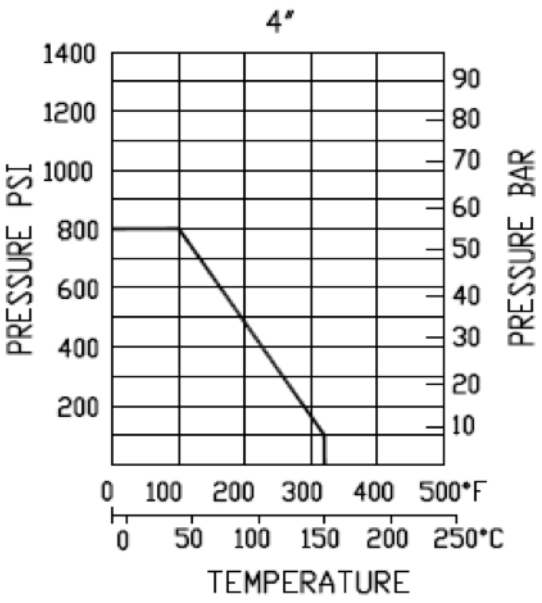

PORT / TYPE	1	2	3	4
L				
T				

NOTE: The Above Charts refer only to the 4" Three Way Ball Valve.

Three Way Ball Valve Dimensions for (4" SIZE)

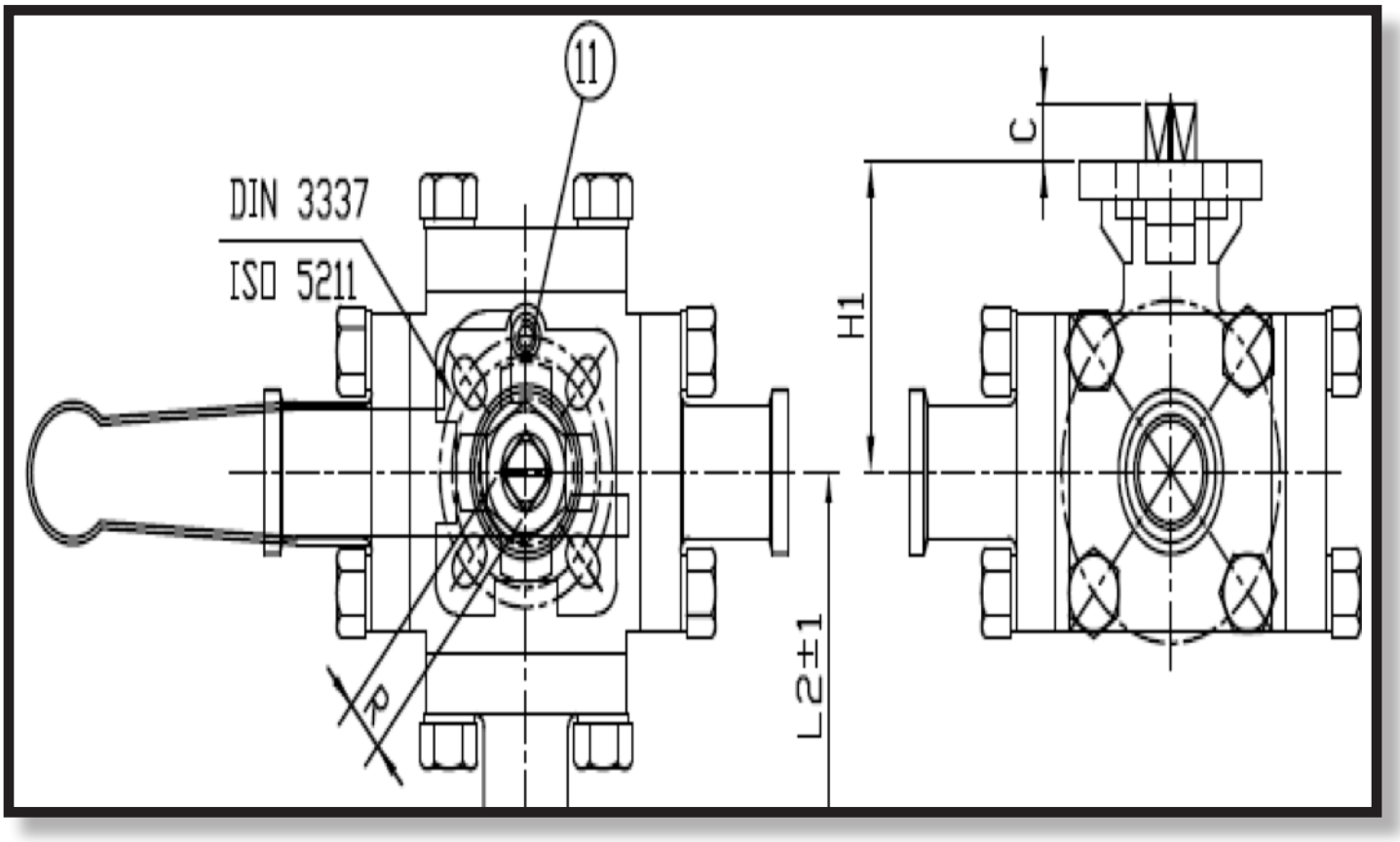

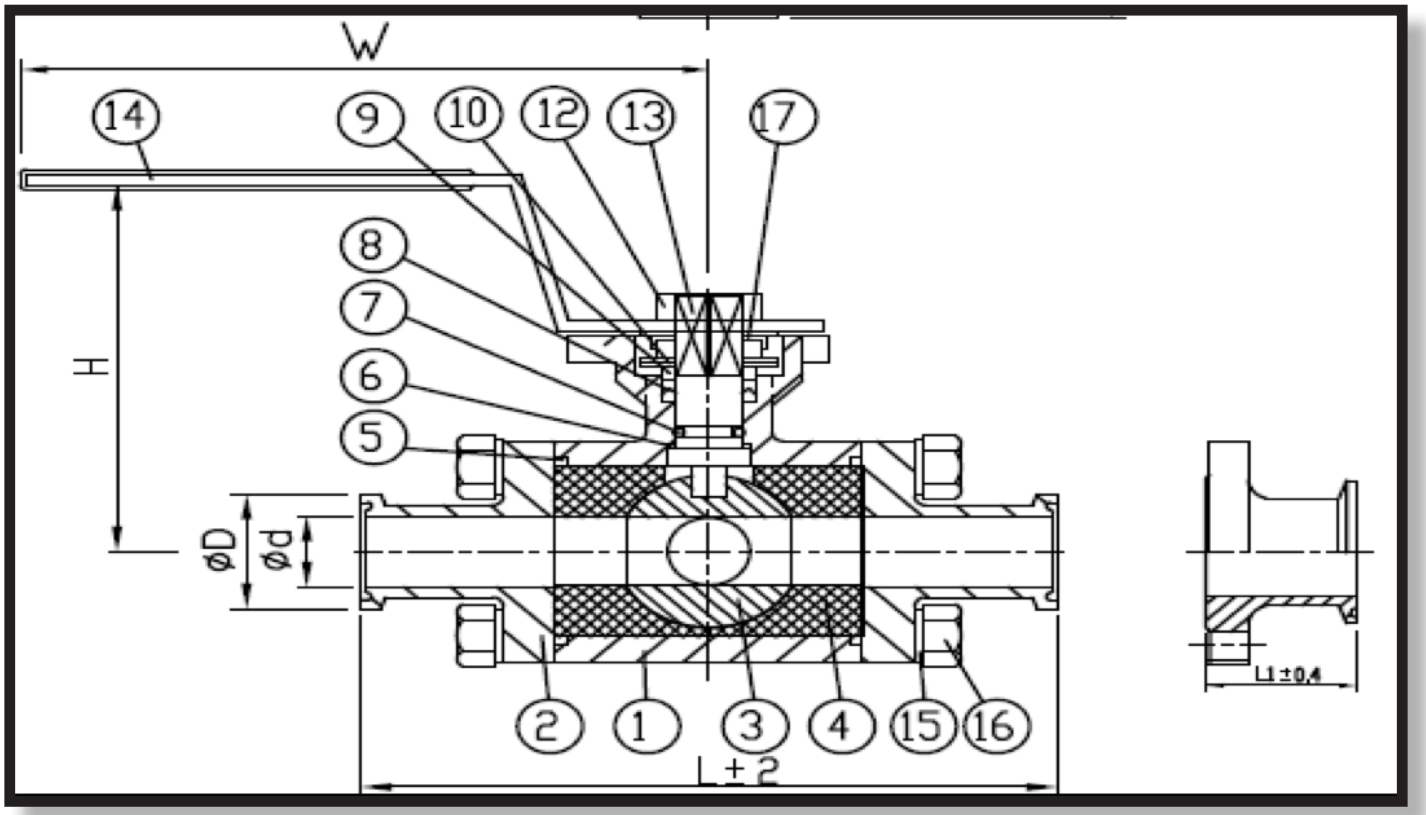

No Expediting Charges/Same Day Shipping

Three Way Ball Valve Dimensions for (4” SIZE)

Size	ISO-5211	W	H	H1	C	R	L
4”	F10/F12	15.75	6.142	5.335	0.905	0.886	11.38

SIZE	L1	L2	¢d	¢d1	¢D	Torque In lbs.	Weight L-Port	Weight T-Port
4”	2.914	6.259	3.835	3.149	4.685	1900	90.00	84.00

Note: “L” Port Part Number Example When Ordering:

SSEBVC3L-SIZE-ALLOY

No Expediting Charges/ Same Day Shipping

Dual Purge Port Ball Valve

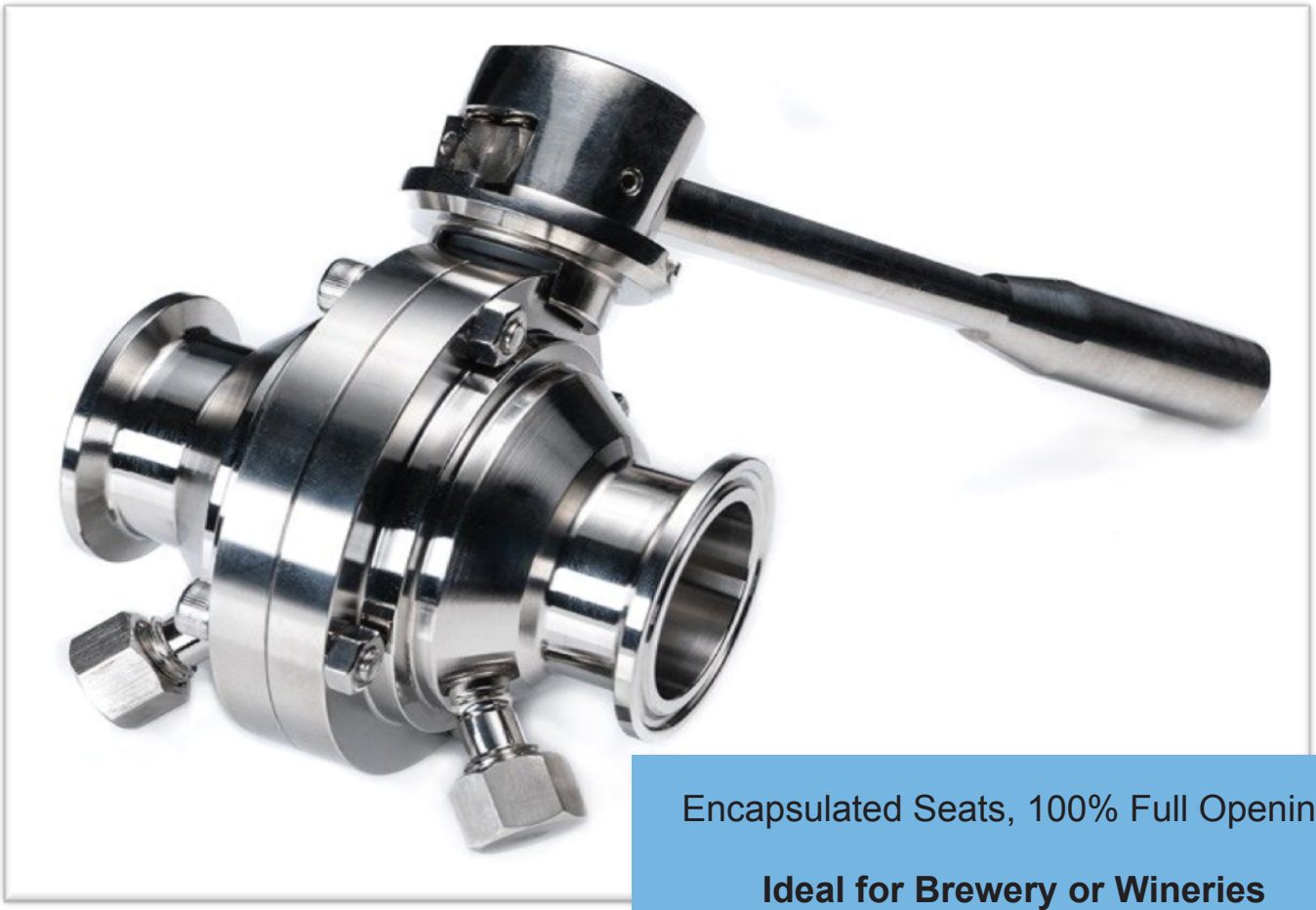

Encapsulated Seats, 100% Full Opening,

Ideal for Brewery or Wineries

Sanitary Solutions is your source for a full port, cavity filled, T304 clamp connection dual purge port ball valve. Our dual purge port ball valve is constructed with a full port positioned inside the valve body between two polished flanges and two Teflon® valve seats. Do you see the two purge ports located at the bottom of the valve for full drain ability, taking samples, and CIP/SIP applications?

Our dual purge port ball valve features a100% full opening and is designed for a maximum pressure of 200 PSI and temperature from 60°F to 300°F while maintaining a full flow rate with a minimum pressure drop.

Note: In a tight situation or if your valve is close to a wall and will not open or close? Solutions: Remove the handle and re-position to open or close the valve.

Dual Purge Port Ball Valve Dimensions

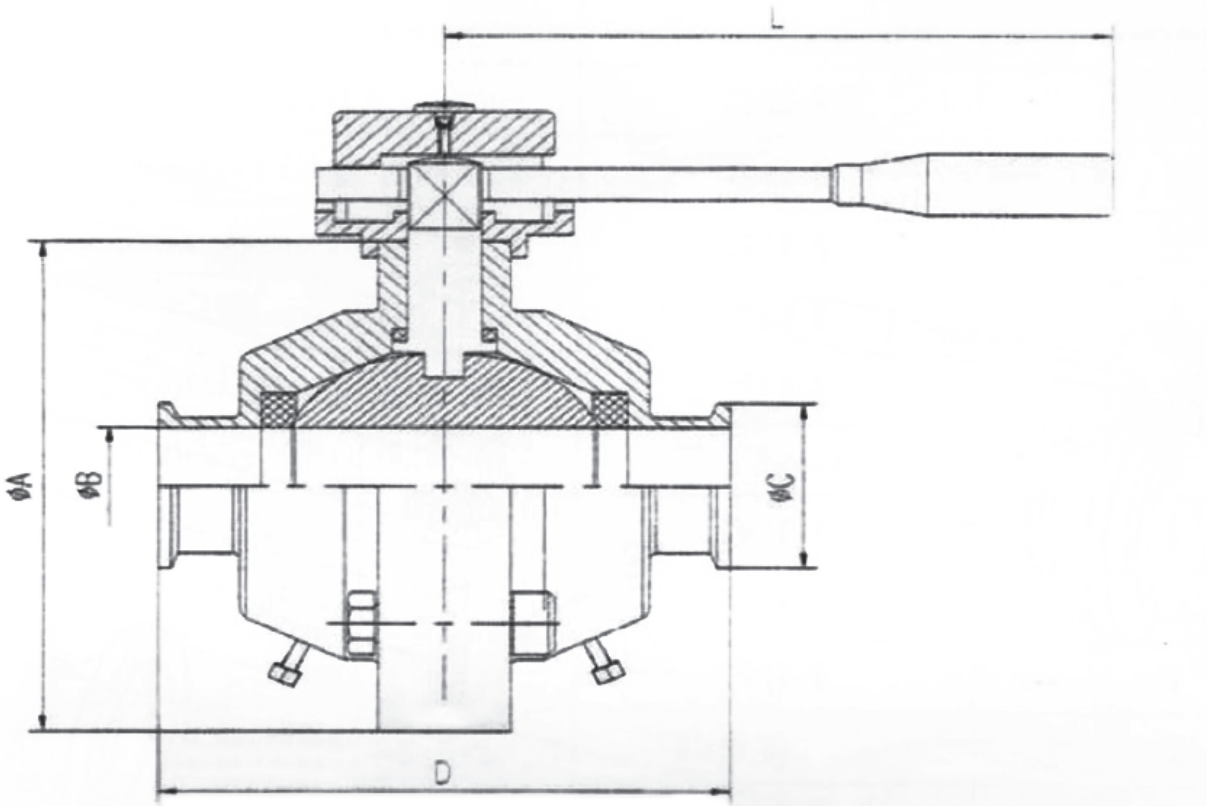

Tube O.D Size	D	A	B	C	L	Weight
1.5”	3.937”	4.528”	1.370”	1.988”	6.299”	4.20
2.0”	4.331”	5.157”	1.870”	2.520”	7.480”	6.00
2.5”	5.118”	6.299”	2.370”	3.051”	8.268”	CALL
3.0”	5.512”	7.323”	2.870”	3.583”	9.843”	13.20
4.0”	6.692”	8.661”	3.835”	4.685”	12.60”	24.00

Note: Dual Purge Port Part Number Example When Ordering:

SSPPBV-SIZE-304

Dual Purge Port Ball Valve Material Breakdown

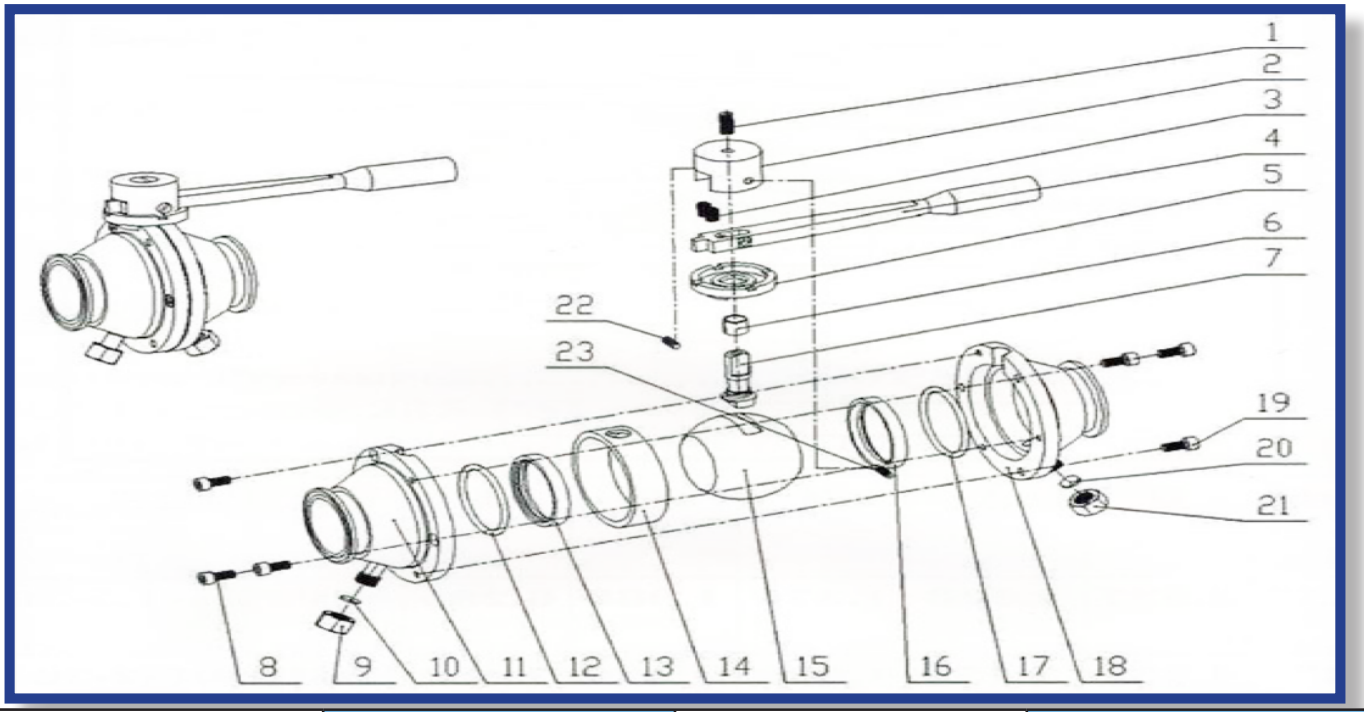

Item	Description	Material	Quantity
S	Bolt	T304	1
2	Rotating Shaft	T304	1
3	Spring	T304	2
4	Handle	T304	1
5	Locating Sleeve	T304	1
6	Stem Packing	PTFE	1
7	Stem	T304	1
8	Bolt	T304	3
9	Nut	T304	1
10	Washer	PTFE	1
11	Valve Body	T304	1
12	O-Ring Seal	Buna	1
13	Seat	PTFE	1
14	Gasket	T304	1
15	Ball Seat	T304	1
16	Seat	PTFE	1
17	O-ring Seal	Buna	1
18	Valve Body	T304	1
19	Bolt	T304	3
20	Washer	PTFE	1
21	Nut	T304	1
22	Hex Deck Bolt	T304	1
23	Hex Deck Bolt	T304	1

Sanitary Air Actuated Butterfly Valve

T316L

Compact Design

NEMA 4 For Wash Down

800K Cycle Tested

Air Open Spring to Close

1”—4” (Stock)

Sanitary Solutions is your source for a T316L Sanitary Air Actuated Butterfly Valves with a compact design.

Sanitary Solutions stocks an EPDM seat as a standard, but we also offer a Silicone or Viton® seat to fit your requirements. Each valve is polished to a 32Ra finish or better and can be washdown (NEMA 4).

Sanitary Solutions provides same day shipping with stocking sizes (1”—4”) to meet your beverage, food or pharmaceutical application.

Actuated Butterfly Valve Part Number Example:

SSABFV-SIZE-316L

Air Actuated Butterfly Valve Dimensions

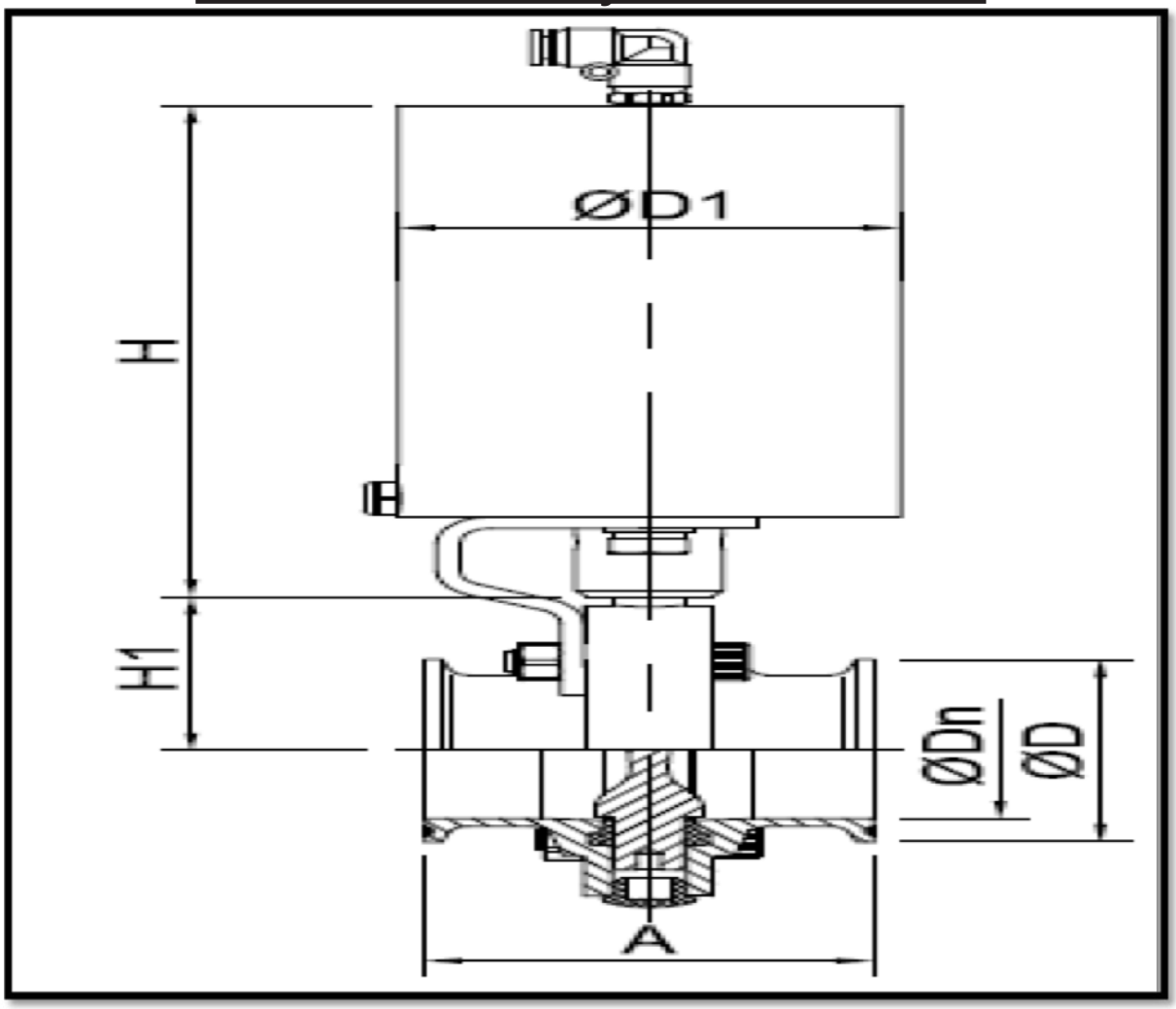

Size	D	D1	A	H	H1	Weight
1”	1.988	3.346	2.598	6.791	1.653	9.80
1.5”	1.988	3.346	2.755	6.791	1.811	9.80
2”	2.519	3.346	2.9692	6.791	2.126	9.80
2.5”	3.051	3.346	3.149	6.791	2.302	10.60
3”	3.583	3.346	3.307	6.791	2.638	12.30
4”	4.685	3.346	4.094	6.791	3.149	16.30

Air Actuated Butterfly Valve Materials List

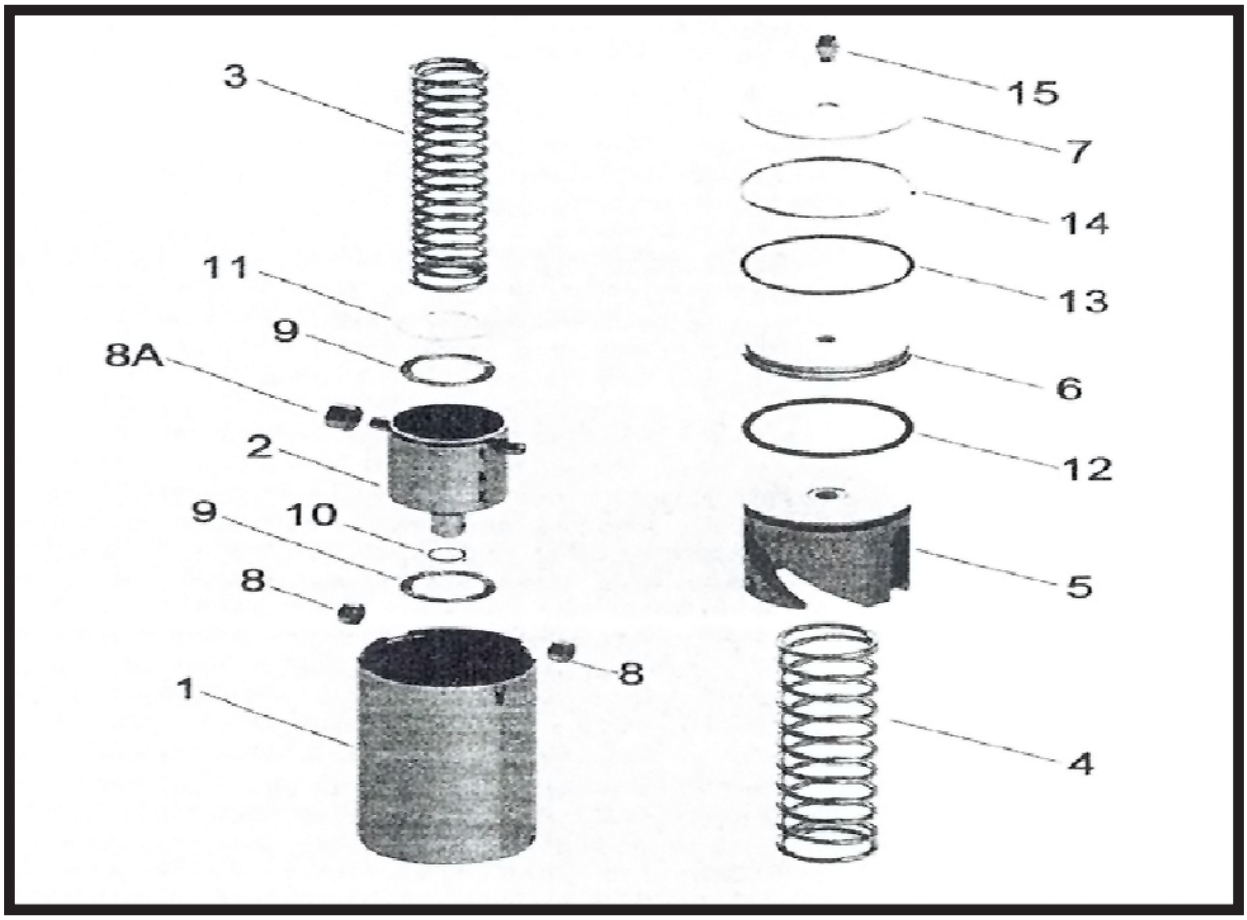

Item	Discription	Material	Quantity	
			SR	DA
1	body	304	1	1
2	drive	304	1	1
3	inner spring	302	1	0
4	outer spring	302	1	0
5	piston	aluminum	1	1
6	end cap	304	1	1
7	top cap	304	1	1
8	needle bearing (body)	304	2	2
8A	needle bearing (drive)	304	2	2
9	thrust bearing	304	2	1
10	O-ring (drive)	EPDM	1	1
11	thrust washer	304	1	0
12	O-ring (Piston)	EPDM	1	1
13	O-ring (end cap)	EPDM	1	1
14	retaining ring	304	1	1
15	air fitting	brass	1	2

Four Position Clamp Butterfly Valve

T316L, 1”—6” Sizes in Stock

Four Positions for throttling and lesser wear on seat

Features of the Four Position Clamp Butterfly Valve:

Sizes: 1”—6” (in stock)

Operating temperature: 15°F to 195°F

100% Hydraulic Pressure Tested

Seat: EPDM(Standard) Silicone, Viton®

Polish: 32Ra or better on wet surfaces

Field Serviceable

Repair Kits in STOCK

Four Position Clamp Butterfly Valve Dimensions:

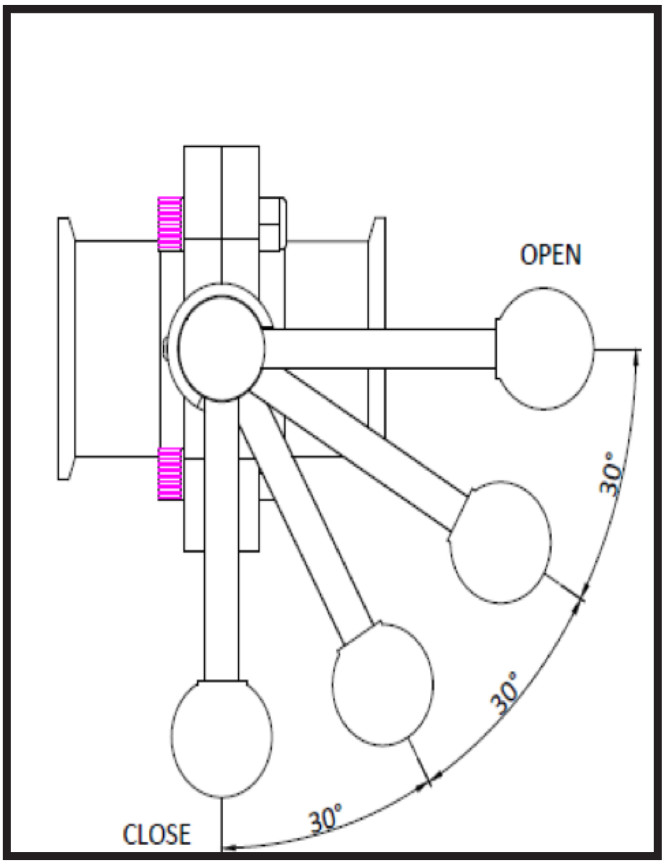

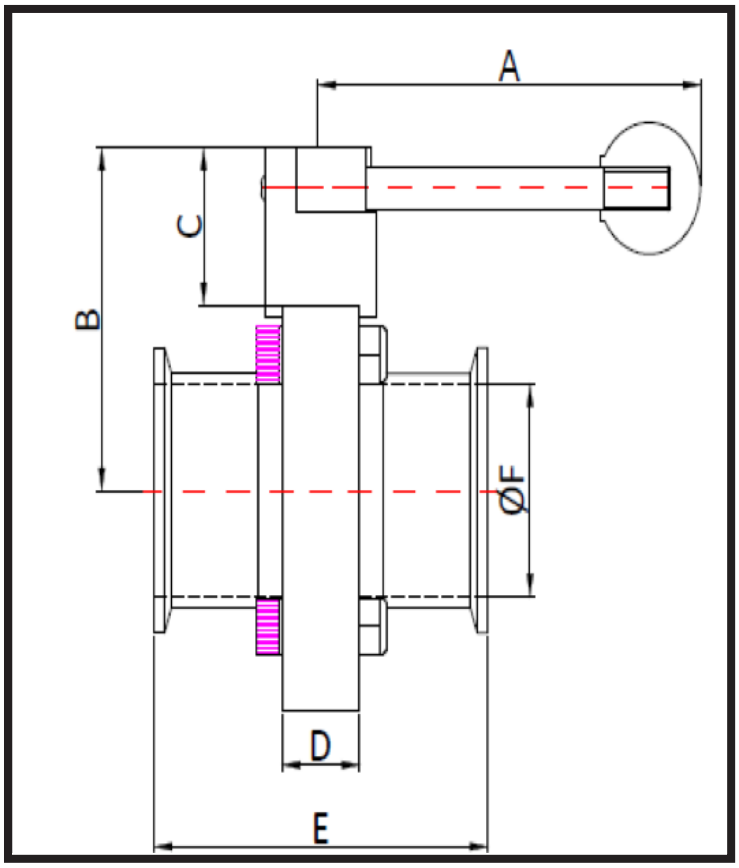

Chart below is based on 68°F Ambient Temperature

Size	A	B	C	D	E	F	Torque Inlbs	PSI	Weight
1”	4.409	2.799	1.358	0.866	3.512	0.874	20	140	3.90
1.5”	4.409	2.799	1.358	0.866	3.512	1.370	40	140	3.20
2”	4.409	3.098	1.358	0.866	3.780	1.870	55	140	4.30
2.5”	4.409	3.500	1.358	0.866	3.827	2.370	70	110	6.30
3”	6.221	3.799	1.339	1.181	4.134	2.866	165	110	6.70
4”	6.221	4.500	1.339	1.181	4.819	3.830	350	85	10.80
6”	11.02	5.382	1.406	1.181	5.512	5.780	700	60	18.00

Four Position Butterfly Part Number Example:
SSBFVF-SIZE-316L

Four Position Clamp Butterfly Valve Material List

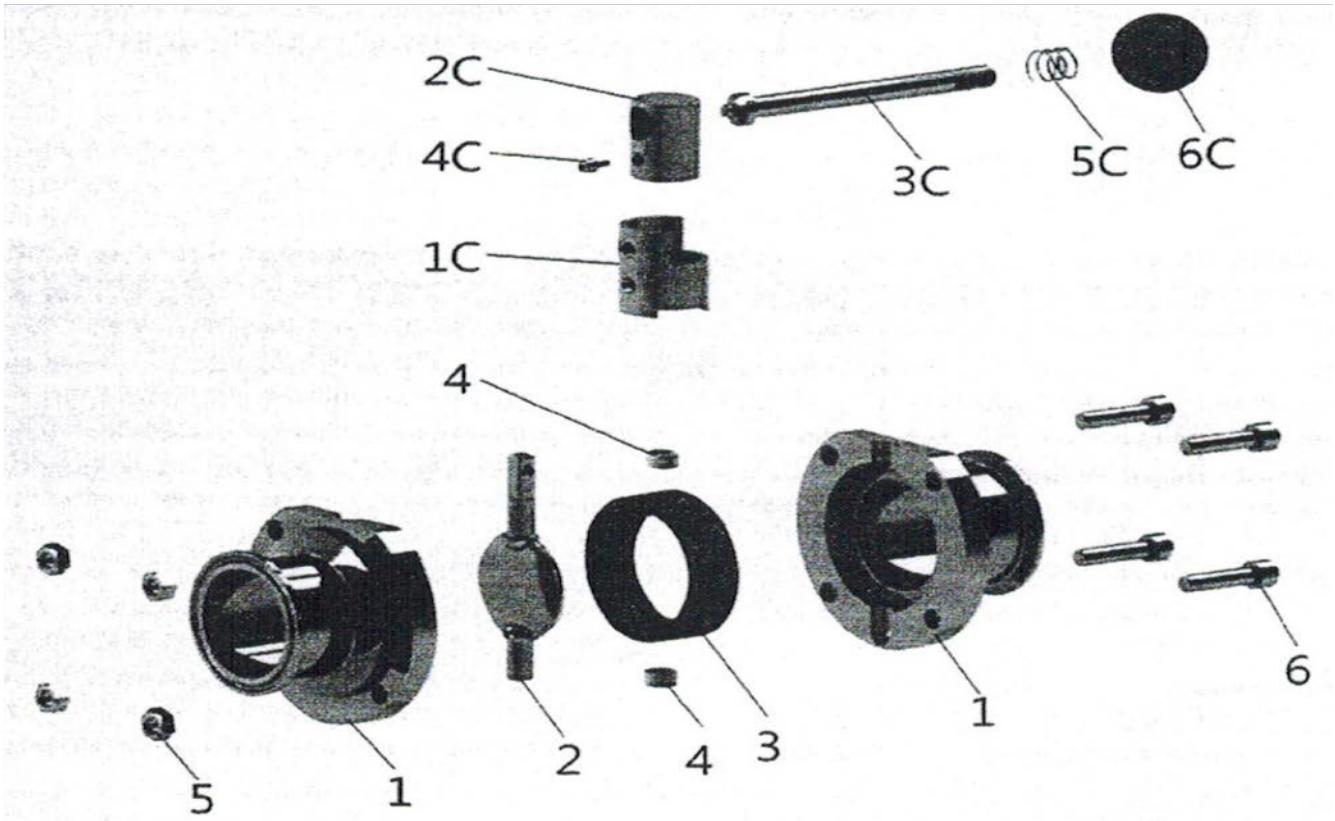

Item	Discription	Material	Quantity
	Pull Handle		
1C	hub housing	CF8	1
2C	hub	CF8	1
3C	handle shaft	304	1
4C	hex socket screw	304	1
5C	spring	304	1
6C	knob	polymer	1
	Valve		
1	body	316L	2
2	disc	316L	1
3	seat	silicone	1
		EPDM	
		FKM	
4	bushing	polyacetal	2
5	hex nut	304	4
6	bolt	304	4
6W	optional wing nut	304	4

T316L Multi-Position Butterfly Valve

EPDM Seat, Grooved Finger Handle for Gripping

Features of the Multi-Position Clamp Butterfly Valve:

T316L **Polish to 32Ra** **Heat Number**

100% Hydraulic Pressure Test

Interchangeable Handle to either side

Operating Temperature: 15°F to 195°F

Field Serviceable **Other Seats: Silicone or Viton®**

Repair Kits: Seat & Bushings (in stock)

T316L Multi-Position Clamp Butterfly Valve Dimensions

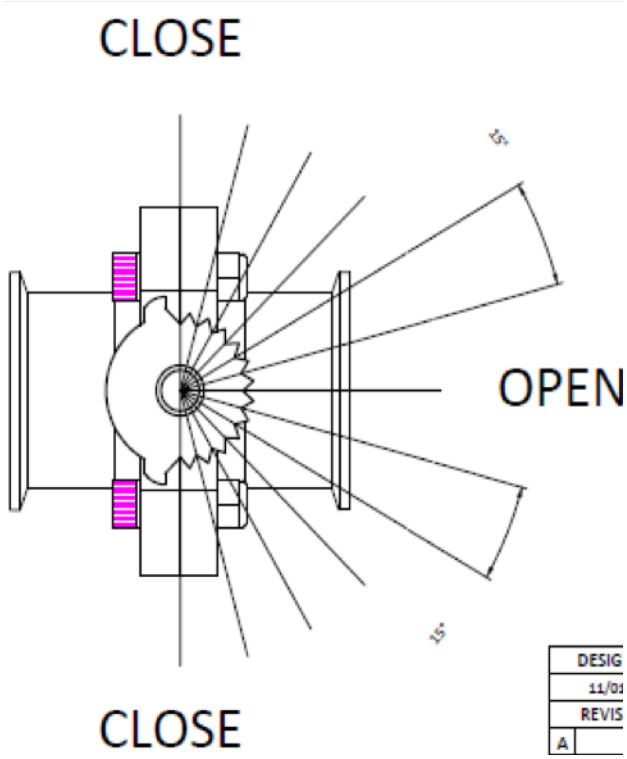

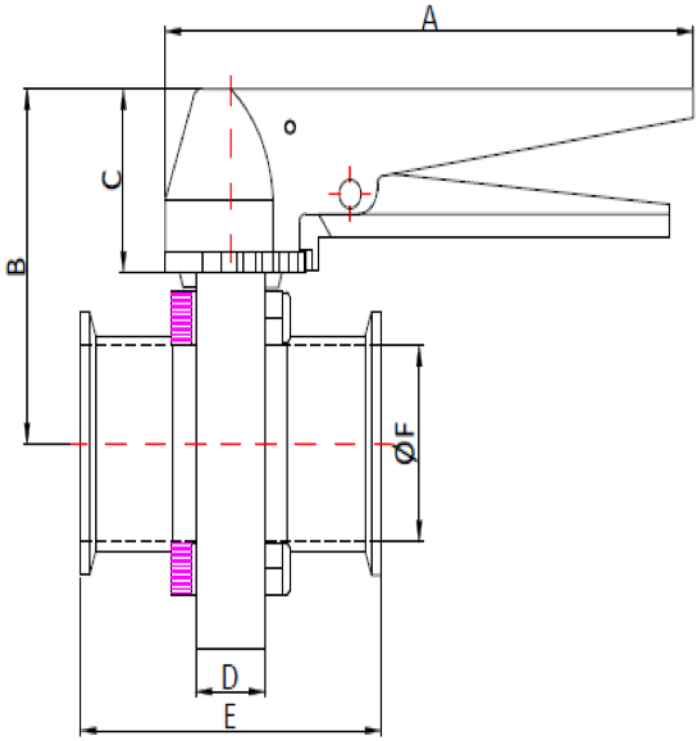

Size	A	B	C	D	E	F	Torque In lbs.	PSI	Weight
1”	6.649	3.016	1.724	0.866	3.512	0.874	75	140	3.90
1.5”	6.649	3.016	1.724	0.866	3.512	1.370	130	140	3.20
2”	6.649	3.358	1.724	0.866	3.780	1.870	165	140	4.30
2.5”	6.649	3.732	1.724	0.866	3.827	2.370	210	110	6.30
3”	6.649	3.969	1.724	1.181	4.134	2.866	350	110	6.70
4”	6.649	4.766	1.724	1.181	4.819	3.830	540	85	10.80

T316L Multi-Position Butterfly Valve Part Number Example:

SSBFV-SIZE-316L

T316L Multi-Position Butterfly Material List

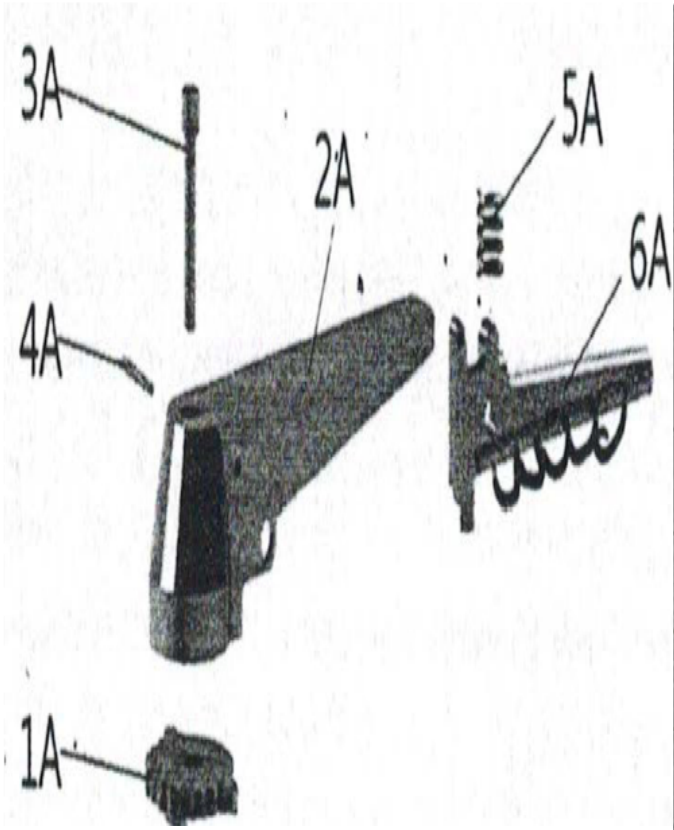

Item	Discription	Material	Quantity
	Trigger Handle		
1A	sprocket	CF8	1
2A	handle	CF8	1
3A	hex socket bolt	304	1
4A	pin	304	1
5A	spring	304	1
6A	trigger	CF8	1

	Valve		
1	body	316L	2
2	disc	316L	1
3	seat	silicone	1
		EPDM	
		FKM	
4	bushing	polyacetal	2
5	hex nut	304	4
6	bolt	304	4
6W	optional wing nut	304	4

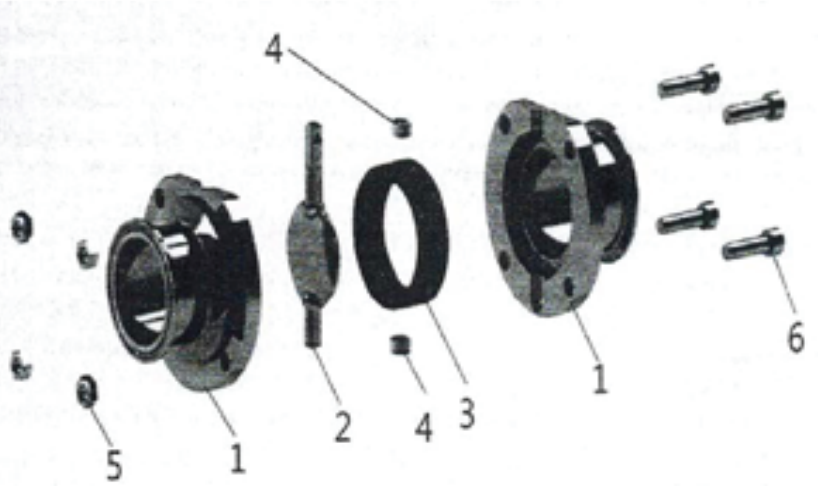

T304 Black Plastic Handle Butterfly Valve

Multiple Positions, EPDM Seat, GREAT PRICE, Repair Kits

Features of the Black Plastic Handle Clamp Butterfly Valve:

T304 **Polish to 32Ra** **Heat Number**

100% Hydraulic Pressure Test

Interchangeable Handle to either side

Operating Temperature: 15°F to 195°F

EPDM Standard-- Other Seats: Silicone or Viton®

Maximum Operating Pressure: 85 psi.

No special Tools/Field Serviceable

Repair Kits: Seat & Bushings (in stock)

T304 Black Plastic Handle Butterfly Valve Dimensions

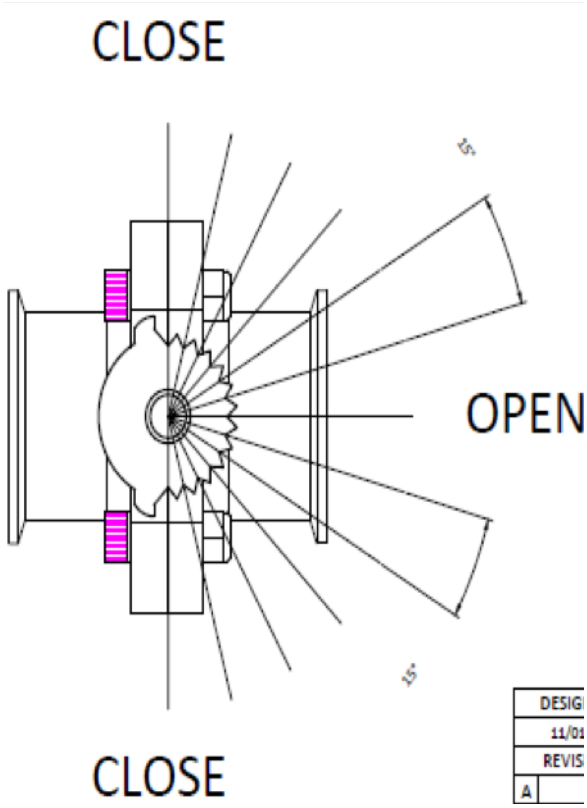

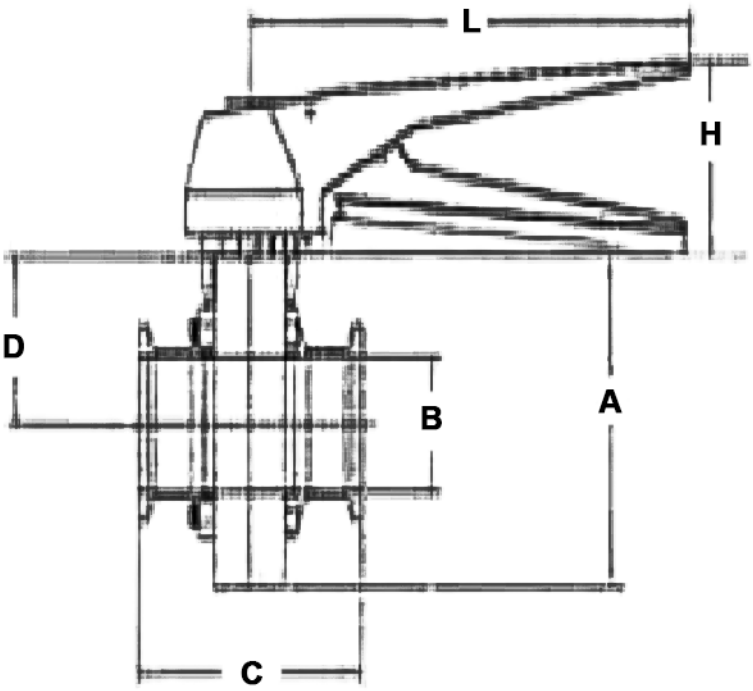

Size	A	B	C	D	H	L	Torque In lbs.	PSI	Weight
1”	3.500	1.000	3.500	1.750	2.165	6.102	75	140	2.50
1.5”	3.750	1.500	3.500	1.750	2.165	6.102	130	140	1.70
2”	4.370	2.000	3.688	1.940	2.165	6.102	165	140	3.20
2.5”	4.750	2.500	3.750	1.875	2.165	6.102	210	110	4.60
3”	5.250	3.000	4.067	2.034	2.165	6.102	350	110	5.80
4”	6.380	4.000	4.750	2.375	2.165	6.102	540	85	10.10

T304 Black Plastic Handle Butterfly Valve Part Number:

SSBFVPE-SIZE-T304

Three Way Rubber Plug Valve, T316

51-01 Polish to a 32 Ra, T316

Features of the Three-Way Rubber Plug Valve:

Alloy: T316 **Polish: 32 Ra or Better**

Sizes Available: 1.5”, 2”, 3”

Clamp Ends are Standard—Bevel Seat & Weld End are available

Made for Low Pressure and Temperature Uses—

Temperatures to 95°F and pressures under 25 psig.

Note: Plug Valves are subject to leakage from the first time they are installed due to cleaning, maintenance and normal operation.

Three Way Rubber Plug Valve Dimensions

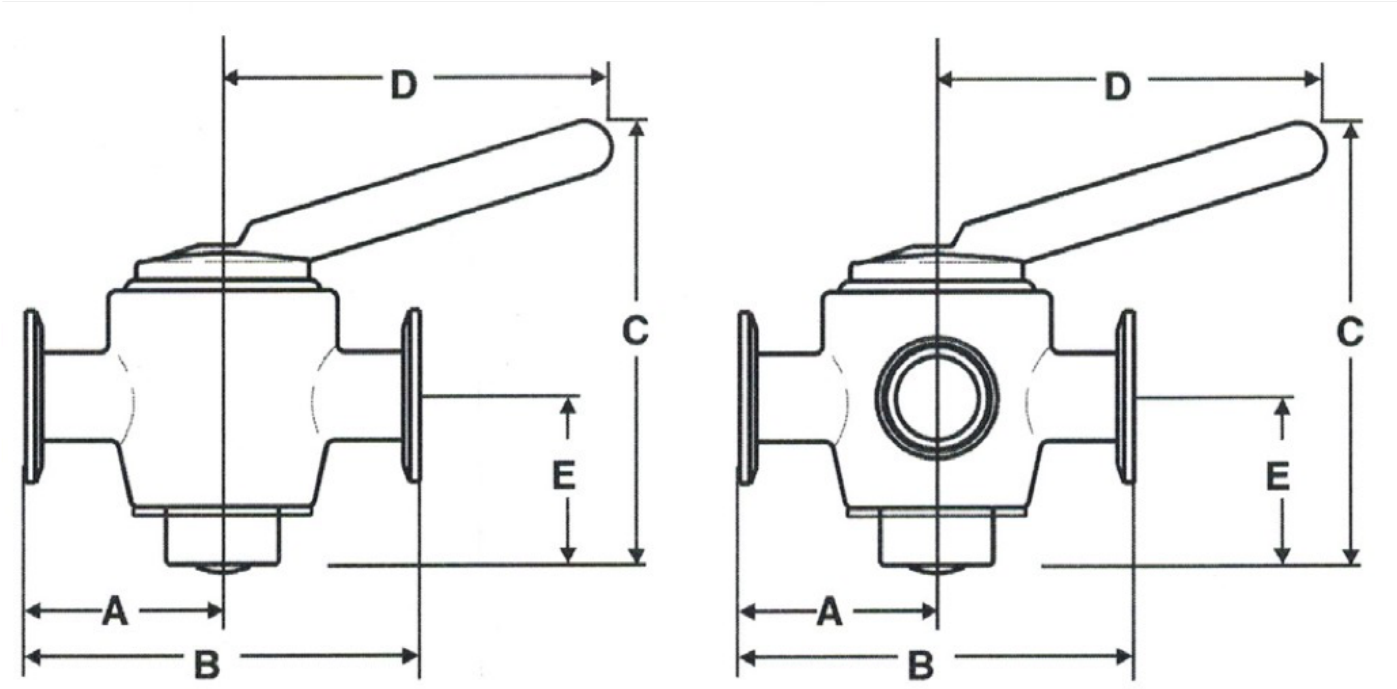

Size	A	B	C	D	E	Weight
1.5”	2.908	5.813	7.055	5.635	2.55	8.00
2”	3.407	6.813	7.633	5.635	2.80	13.00
3”	4.781	9.438	9.750	7.250	3.75	34.10

T316 Three Way Rubber Plug Valve Part Number:

SS11MPR3WAY- SIZE- 316

No Expediting Charges/ Same Day Shipping

Air Relief Valve

Features of the Air Relief Valve:

Alloy: T304

1.5” & 2” Sizes in Stock

Valve seals for Vacuum and Pressure

Max. Operating Temperature: 210° F

Ball: Polypropylene (standard)—PTFE is available

No Special Tools

Repair Kits: Ball & Gasket in Stock

Air Relief Valve Material Parts

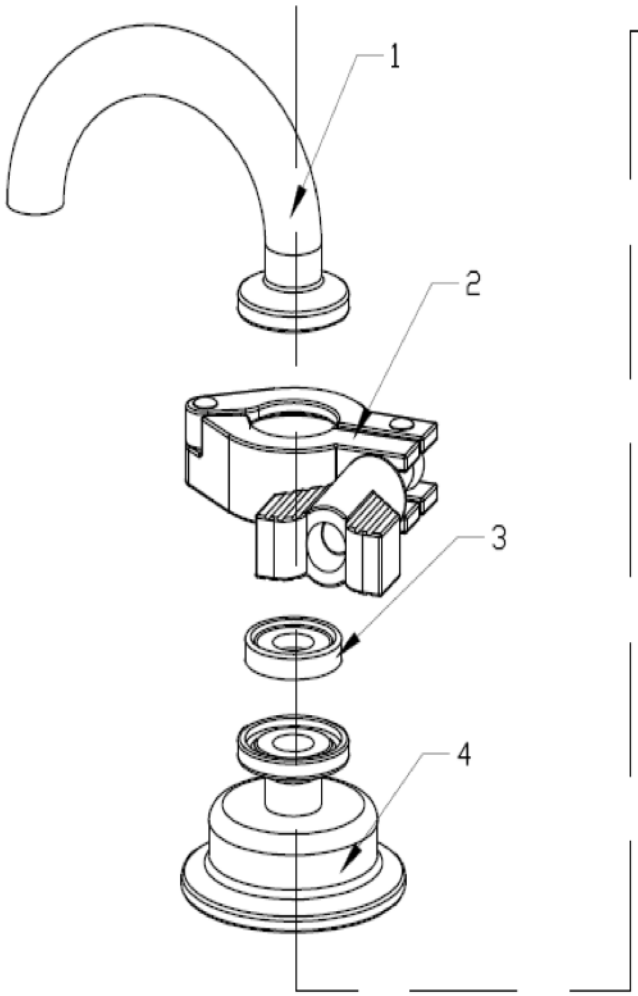

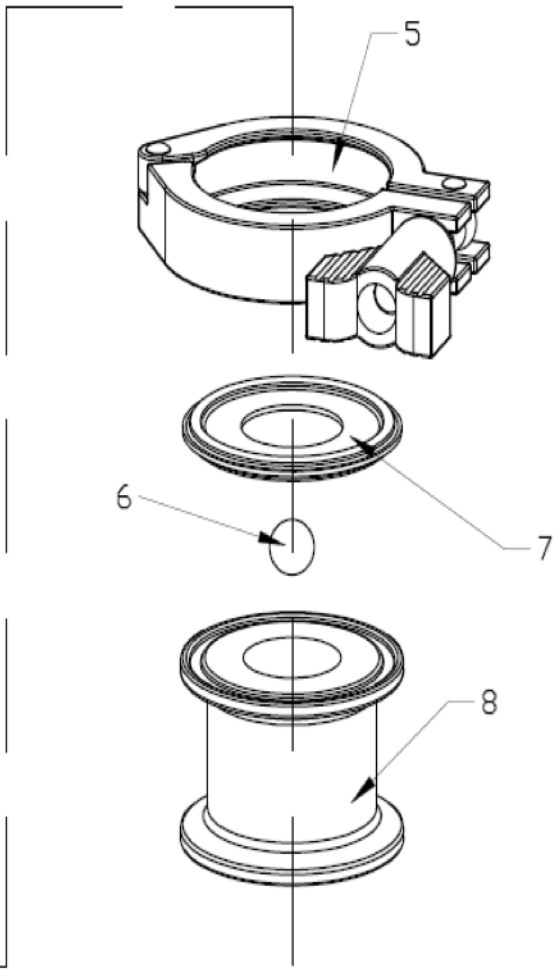

NO.	Description	Material	Quantity
1	180° TUBE FERRULE	304 stainless	1
2	1/2" CLAMP	CF8 stainless	1
3	1/2" GASKET	EPDM	1
4	3A cover	304 stainless	1
5	1-1/2" CLAMP	CF8 stainless	1
6	BALL	PP or PTFE	1
7	1" GASKET	EPDM	1
8	BODY	CF8 stainless	1

Air Relief Valve Part Number Example:

SSARV-SIZE-304

Air Relief Valve Dimensions

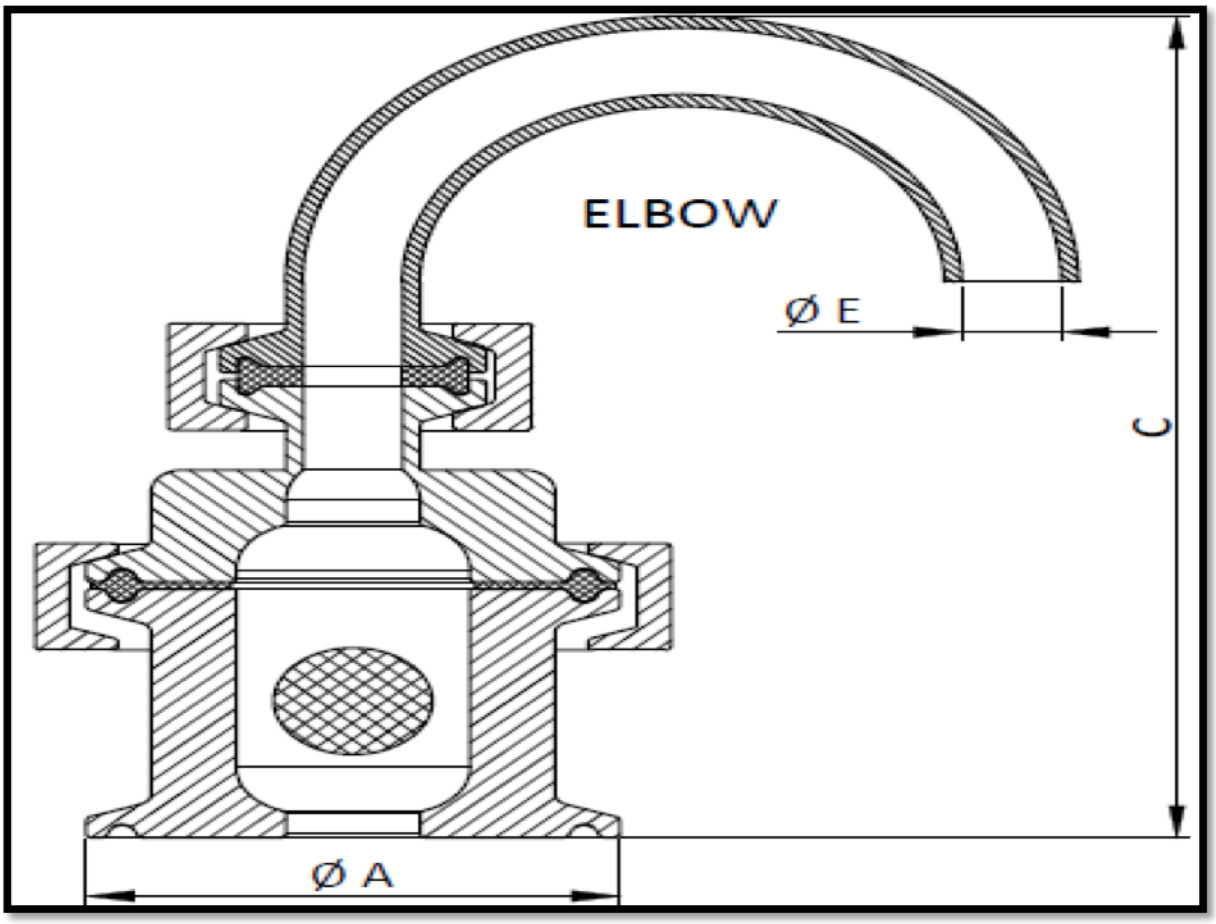

Size	A	C	E	Weight
1.5”	2.516	4.488	0.370	2.10
2”	3.047	4.488	0.370	1.90

No Expediting Charges/ Same Day Shipping

Tank Pressure-Vacuum Relief Valve

Features of the Tank Pressure-Vacuum Relief Valve:

Alloy: T304

Size: 1.5” & 2” (in stock)

Finish: Polish to a 32Ra

Vacuum: Factory set at 0.15 psi.

Pressure: Factory preset at 15 psi.

Note: This valve is sealed and can’t be opened for safety reasons.

Tank Pressure-Vacuum Relief Valve Dimensions

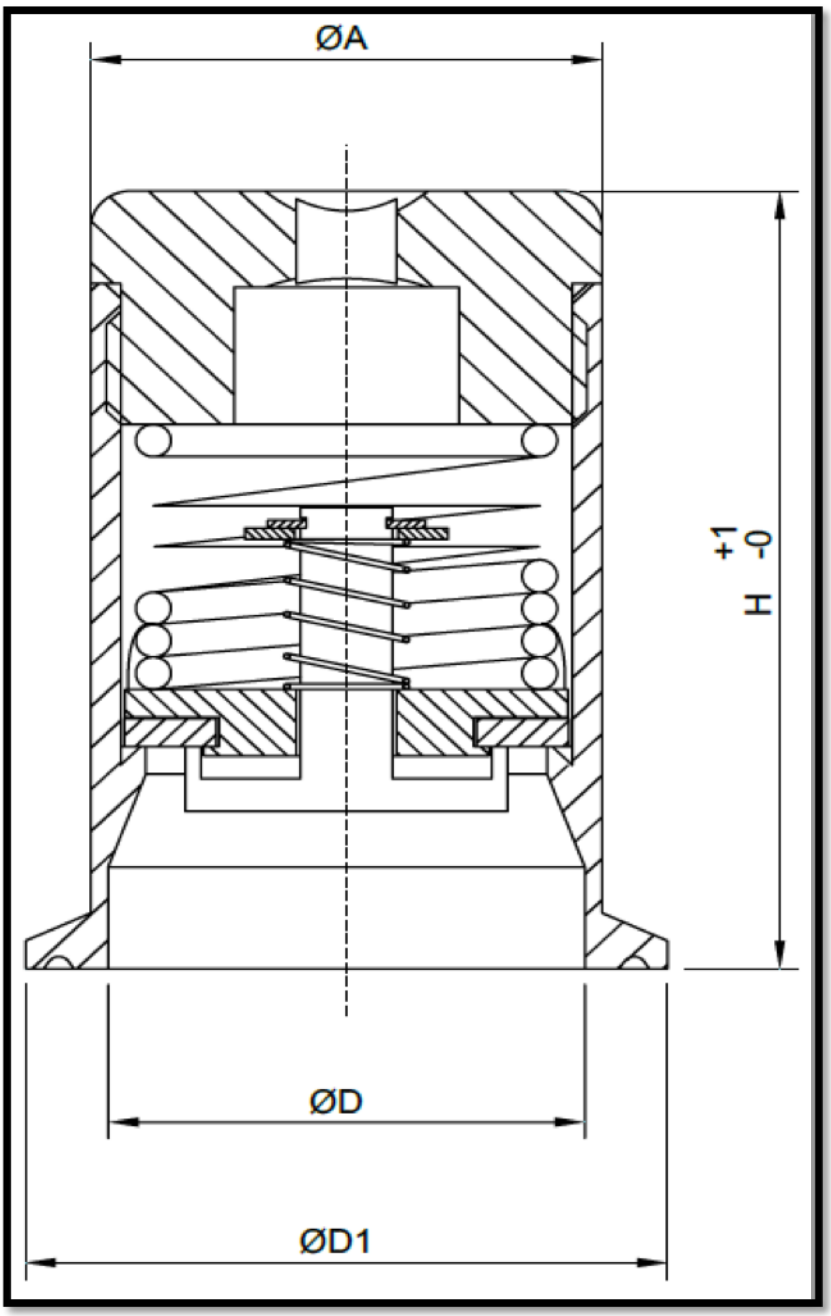

Tank Pressure-Vacuum Relief Valve Part Number:

SSPVRV-Size-304

SIZE	A	D	D1	H	Weight
1.5”	1.730	1.530	1.990	3.310	1.10
2”	2.010	1.970	2.520	3.310	1.50

Tank Valve representation under Excessive Pressure or Vacuum

Excessive Pressure

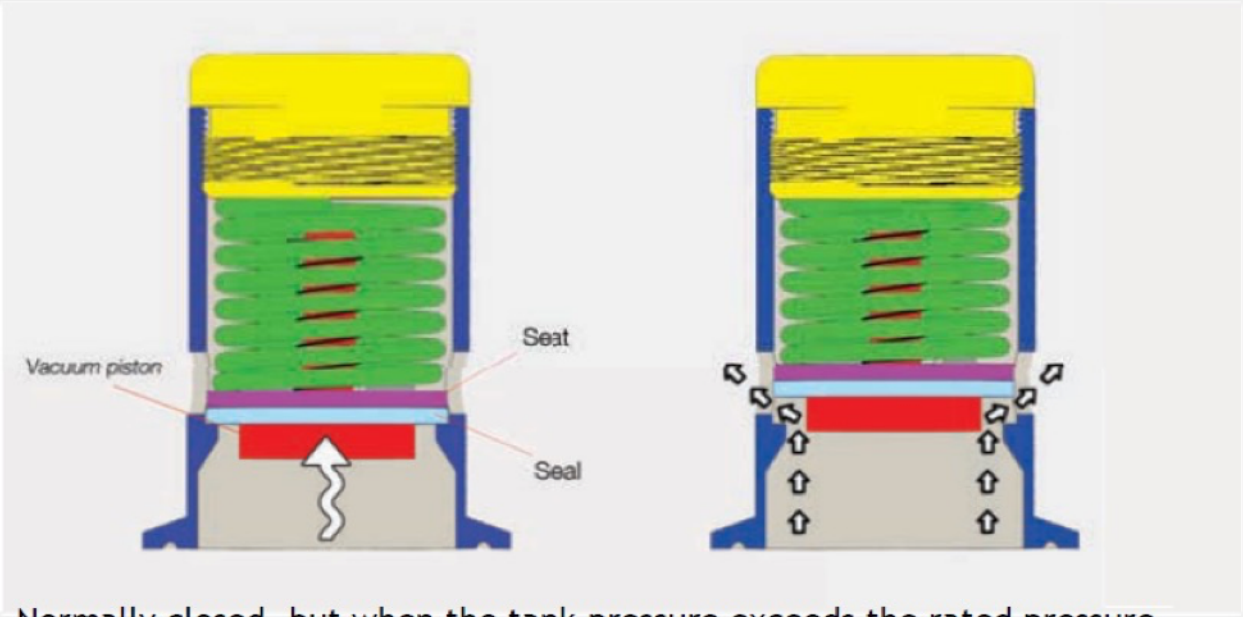

Normally closed, but when the tank pressure exceeds the rated pressure, the valve automatically opens to vent air out.

Vacuum

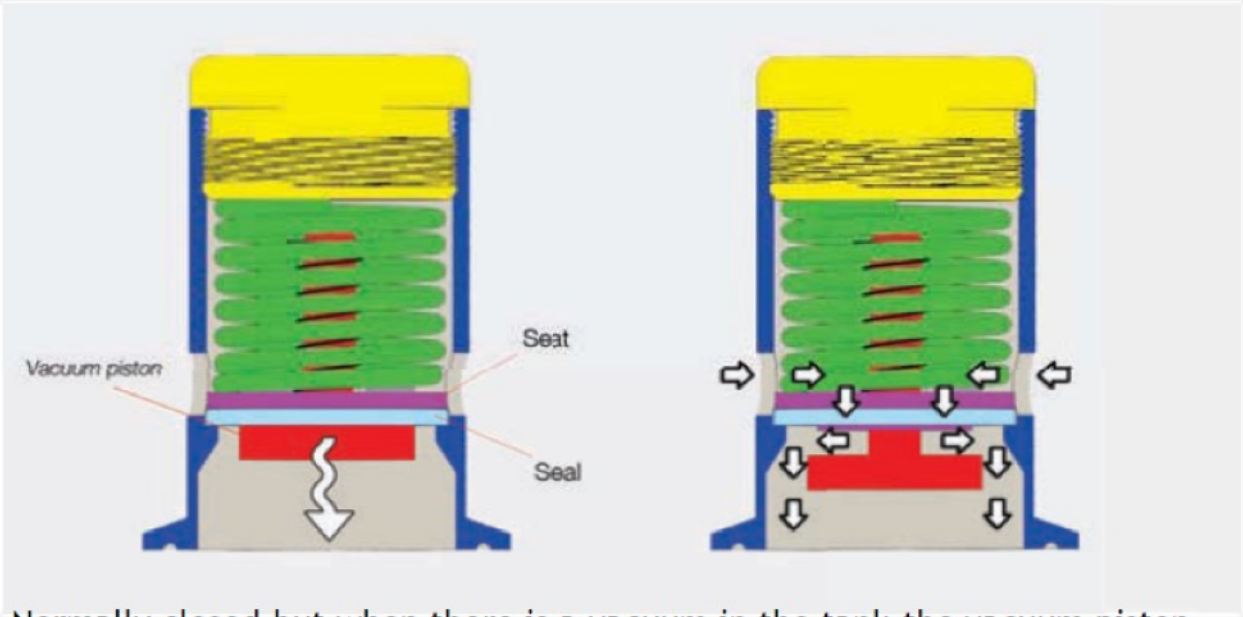

Normally closed,but when there is a vacuum in the tank,the vacuum piston opens automatically,drawing air into the tank. Thus, keeping pressure balance. inside and outside the tank

Vacuum-Air Relief Valve for either a 2” or 3” Clamp Connection

Features of the Vacuum-Air Relief Valve:

Accommodates either a 2” or 3” clamp connection

Maximum flow rate: 500 GPM

Pressure relief: 1 psi.

Vacuum break: 1 psi.

Dome helps in preventing external contamination

Alloy: T304 & Robust PVC

Vacuum-Air Relief Valve for either a 2” or 3” Clamp Connection

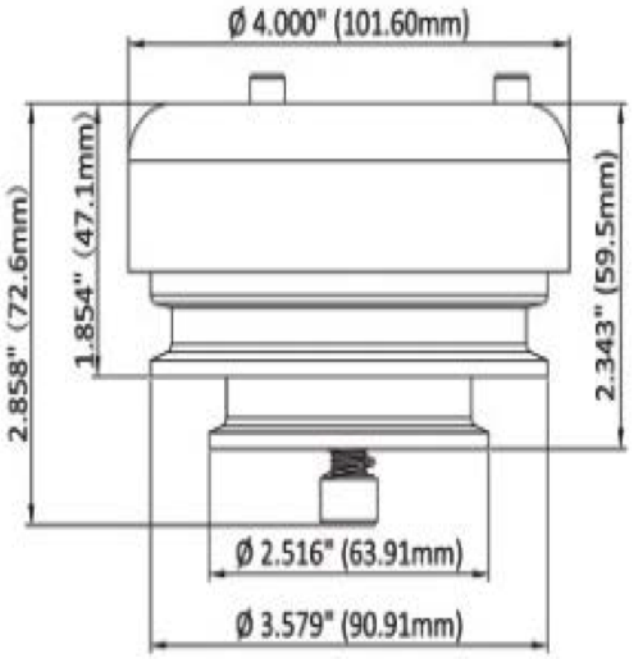

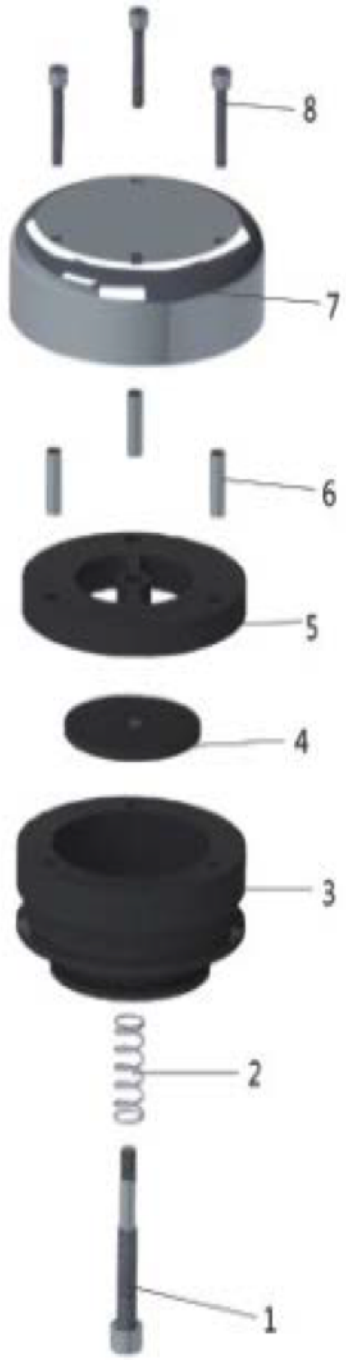

Material Lists

Item	Discription	Material	Quantity
1	spring bolt	304	1
2	spring	304	1
3	body	PVC	1
4	check plate	PVC	1
5	flow plate	PVC	1
6	spacer	304	3
7	cap	304	1
8	cap bolt	304	3

“Live” People Answering your call

T304 Tank Vent

Features:

Alloy: T304

Pressure: Preset at the Factory @ 1 psi.

Vacuum: Preset at the factory @ 0.09 psi.

Seals: EPDM Bushing: POM

2” Flow Capacity: 240 gpm **3” Flow Capacity: 540 gpm**

Temperature Range: 60°-- 295°F

T304 Tank Vent Dimensions

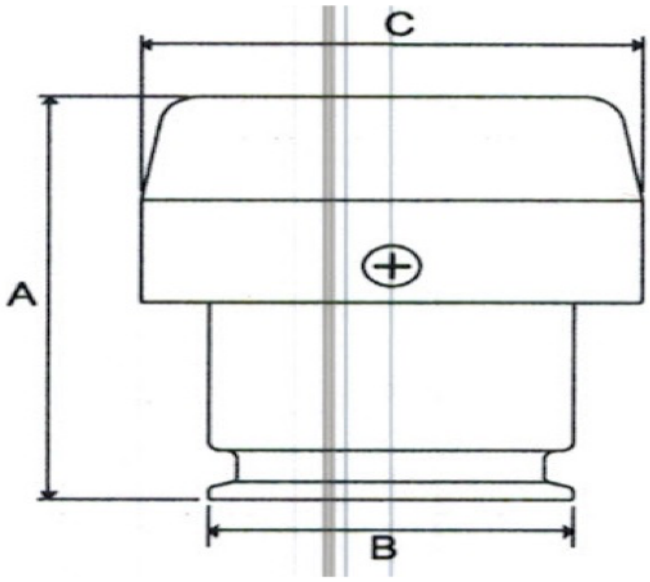

SIZE	A	B	C	Weight
2”	3.859	3.535	3.470	2.85
3”	3.859	3.566	4.689	4.50

So, what is a tank vent or tank relief valve and how does it work? The Sanitary Solutions Tank Vent or Relief Valve works in the following way-- From the **Vacuum side**, when the valve is normally closed and there is vacuum in the tank, the vacuum piston inside the valve opens automatically and draws air into the tank. In return, this keeps the pressure inside and outside the tank balanced. From the **Pressure side**, when the valve is normally closed, and the tank pressure exceeds the rated pressure which on the outside of the valve, the valve automatically opens and vents air to atmosphere.

Where do I position and install this valve? As for installation of the clamp style Tank Pressure and Vacuum Relief Valve, position the valve on the process line and tighten the nut or fasten the clamp according to the fastening system selected and if you are using the clamp style it is recommended to use a clamp gasket and tighten the wing nut of the Heavy Duty Single Pin Clamp to 25 inch pounds of torque.

T304 Sample Valves

Features of the T304 Sample Valves:

Alloy: T304

Polish: 32Ra Sanitary Finish on OD

Sizes: 1” clamp and 3/8” NPT

Temperature rating: 295°@ 195 PSI

Double Silicone O-Rings

1” Clamp Size x 0.375” or 0.50” Barb in Stock

Repair Kits in Stock

T304 Sample Valve Dimensions

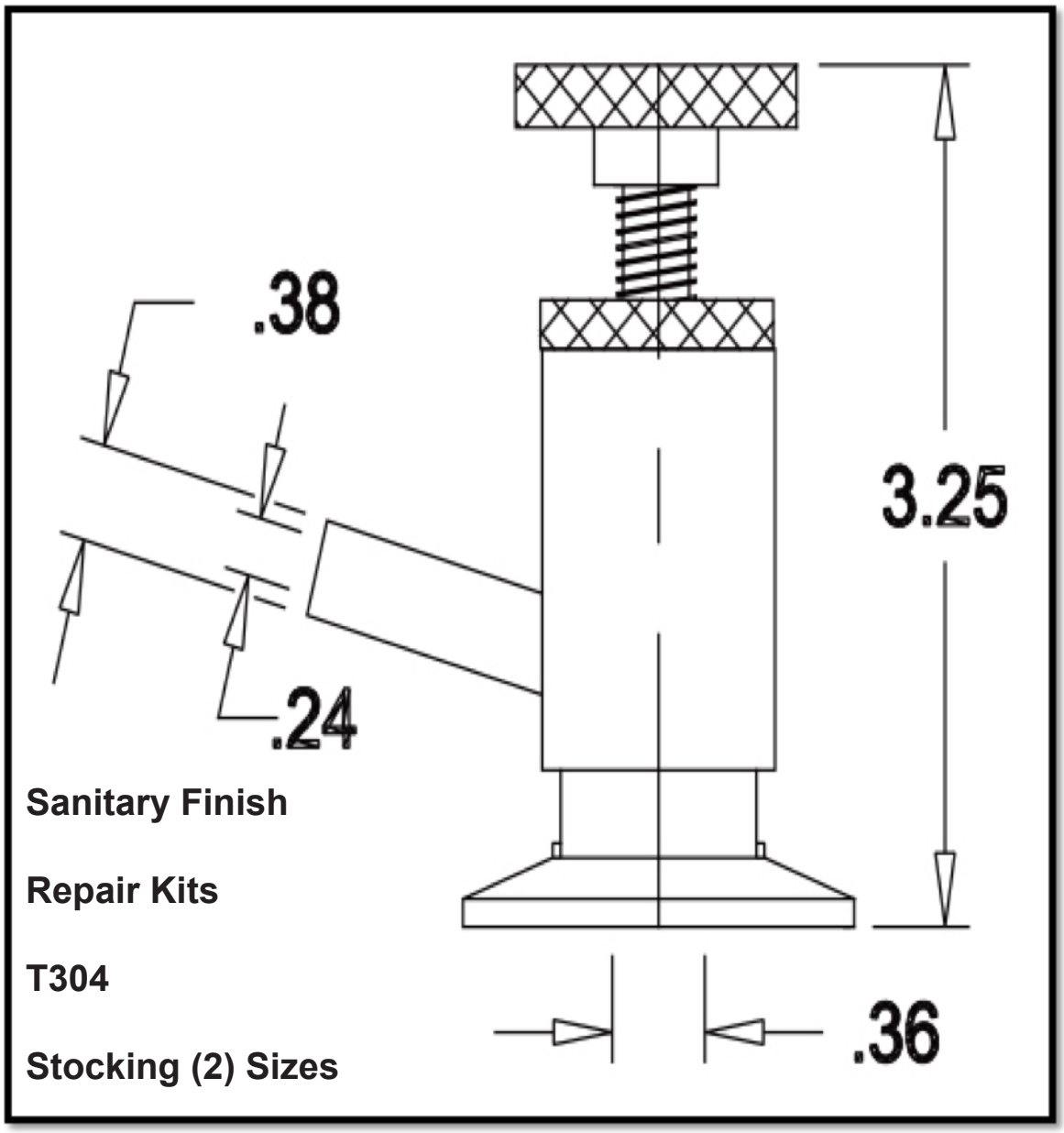

Note: The above valves are commonly found in the beverage/winery industries.

Sample Valve Part Number Example:

SSSV-SIZE-304

Clamp “L” Body Relief Valve

Clamp “L” Body Relief Valve Features:

Alloy: T316L (Hex Union Nut is T304)

Sizes: 1.5”, 2”, 3” are in Stock

Spring: 5—25 psi (stock)

Sanitary Solutions can offer optional relief spring ranges

Clamp “L” Body Relief Valve Dimensions

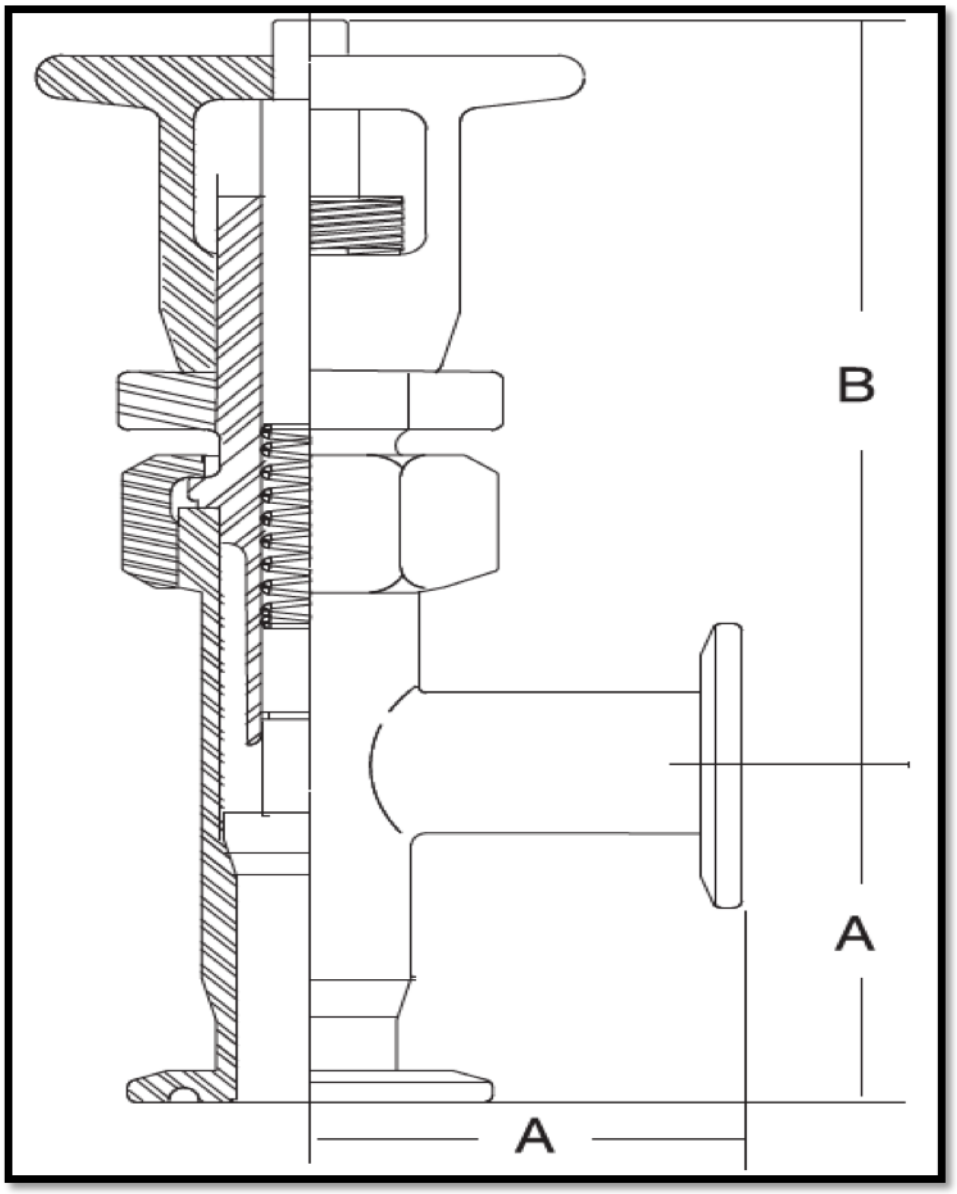

SIZE	A	B	Weight
1.5”	2.812	7.375	5.00
2”	3.625	7.625	6.50
3”	3.875	11.25	11.00

Clamp “L” Body Material Breakdown

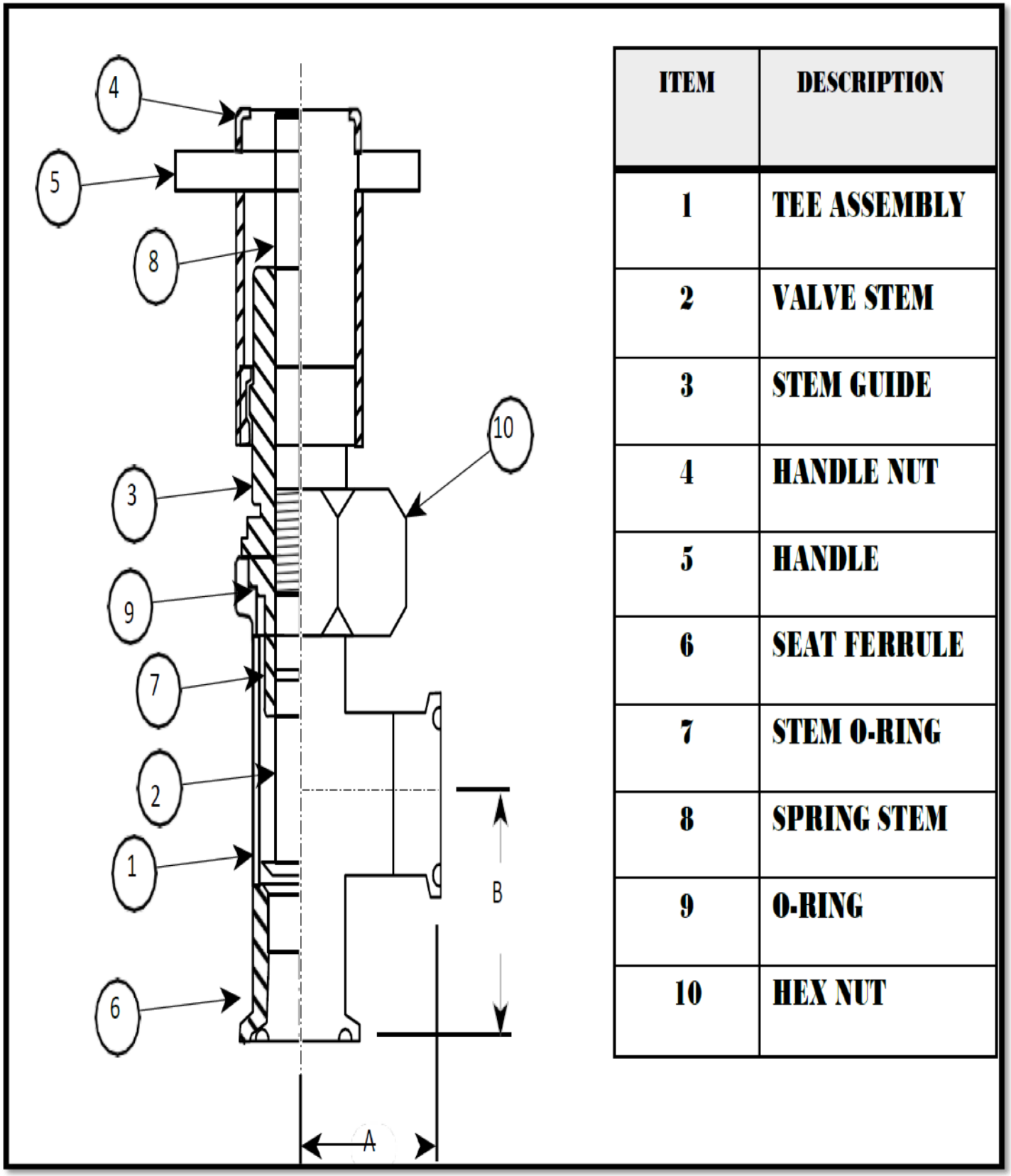

ITEM	DESCRIPTION
1	TEE ASSEMBLY
2	VALVE STEM
3	STEM GUIDE
4	HANDLE NUT
5	HANDLE
6	SEAT FERRULE
7	STEM O-RING
8	SPRING STEM
9	O-RING
10	HEX NUT

Clamp “L” or “T” Pressure Relief Valve

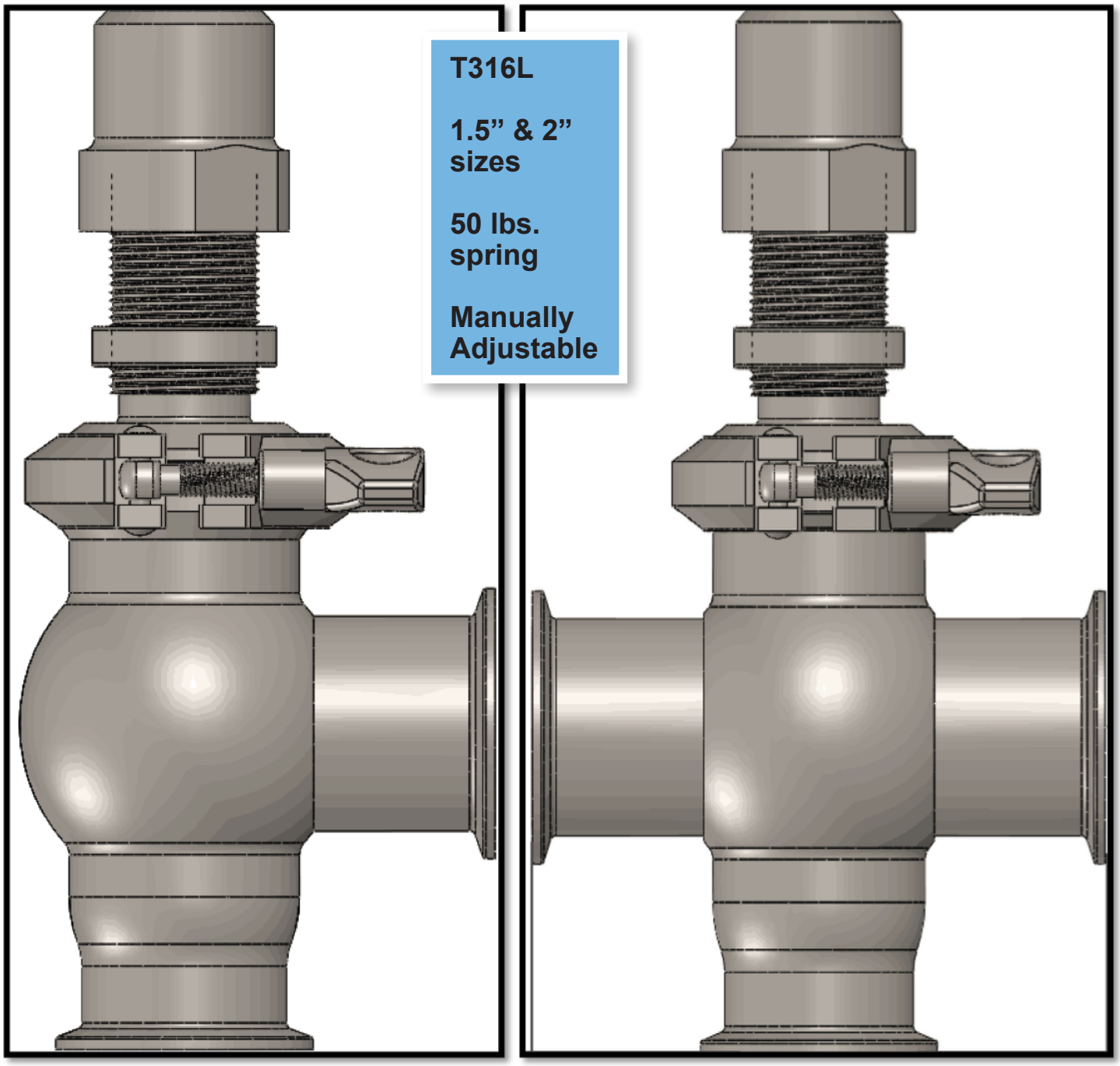

Lockable Cap for setting the relief pressure

PTFE O-Ring & Seat

Polish to 32 Ra finish

Clamp “L” or “T” Pressure Relief Valve Materials

Pressure Relief Valve
Bill of Materials

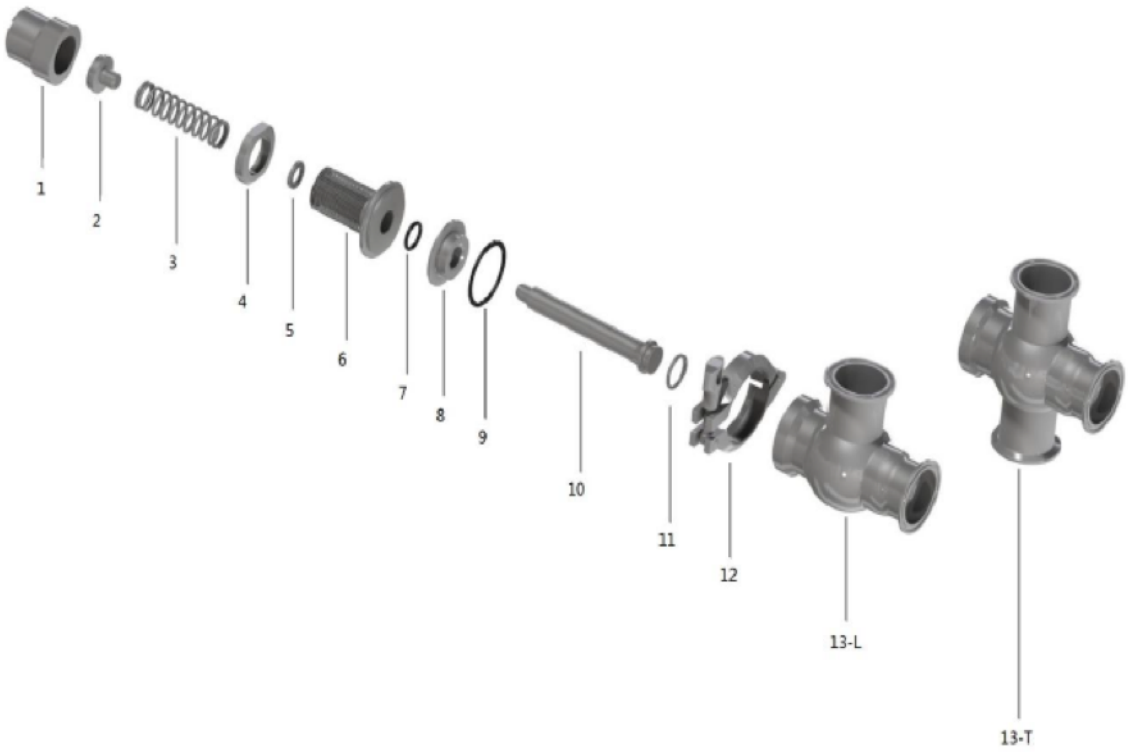

Item	Description	Material	Quantity
1	Adjust Cap	304	1
2	Top Cap	304	1
3	Spring	304	1
4	Adjust Nut	304	1
5	Washer	304	1
6	Cylinder	304	1
7	Stem Holder O-Ring	EPDM	1
8	Stem Holder	316L	1
9	Seal	EPDM	1
10	Stem	316L	1
11	Stem O-Ring	PTFE	1
12	Clamp	304	1
13-L	Main Body (L-Type)	316L	1
13-T	Main Body (T-Type)	316L	1

Clamp “L” Pressure Relief Valve Part Number:
SSPRVL-SIZE-316L

T316L Product Recovery System (PIG System)

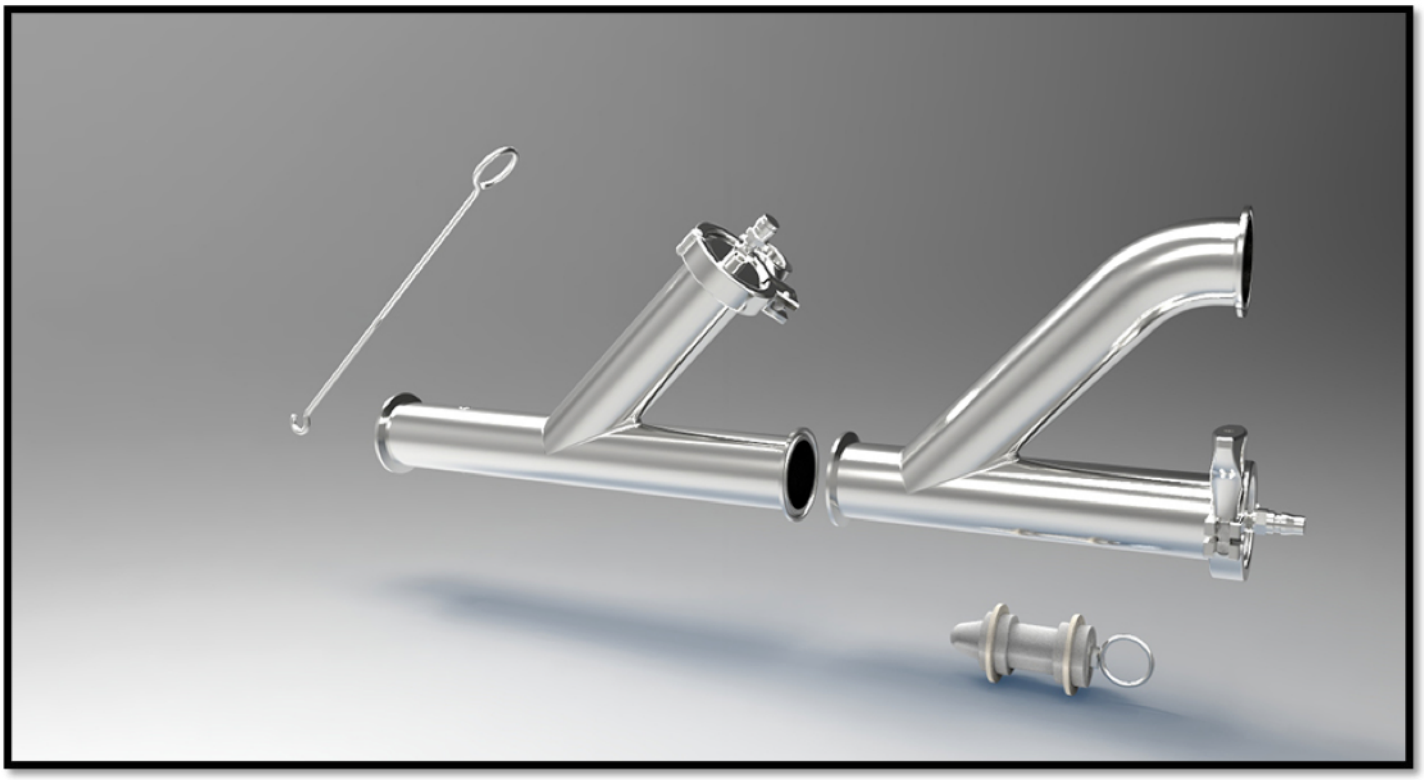

T316L Product Recovery System (PIG System)

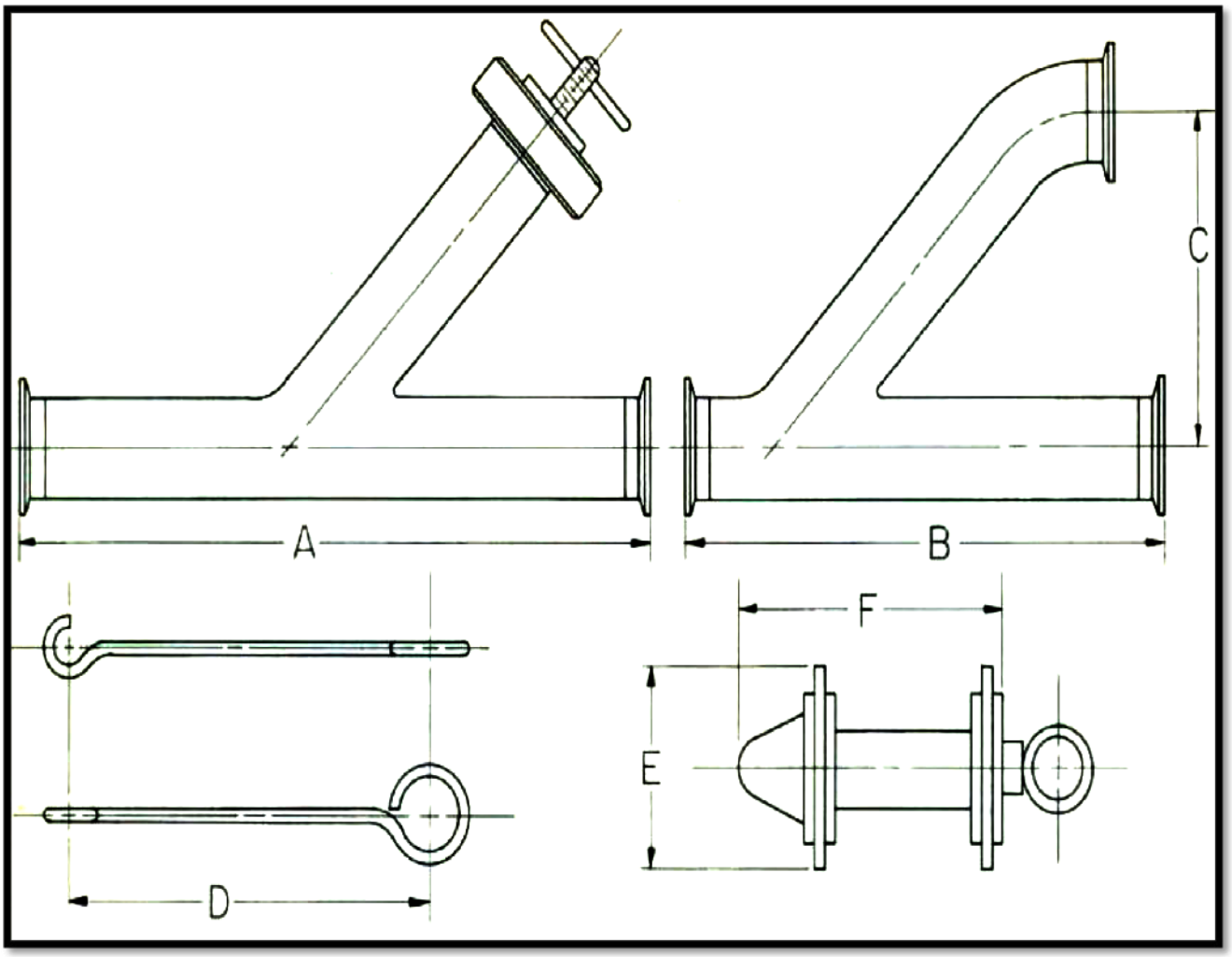

SIZE	A	B	C	D	E	F	Weight
1.5”	11.69	8.938	5.063	10.50	1.469	2.813	5.40
2”	13.81	10.38	5.906	11.50	1.968	3.531	8.60
2.5”	16.00	11.66	7.094	12.00	2.425	4.438	12.40
3”	18.25	12.47	7.563	12.25	2.925	5.625	15.00
4”	20.50	13.63	9.343	12.25	3.934	6.250	25.30

Features:

Meets all 3-A requirements

Faster Changeovers, Fewer Washouts & Handles Viscous Products

Our “PIG” will pass through elbows and tees

3-A Stationary Spray Ball

40 gpm @ 25 psi **T316L**

78-02

Polished to Sanitary Finish

Features:

Wraparound Collar (in stock)

Alloy: T316L

40 gpm @ 25 psi.

Polish to a 32 Ra

E-Mail Confirmation with Tracking Number to you
“Live” People Answering your call

3-A Stationary Spray Ball Dimensions

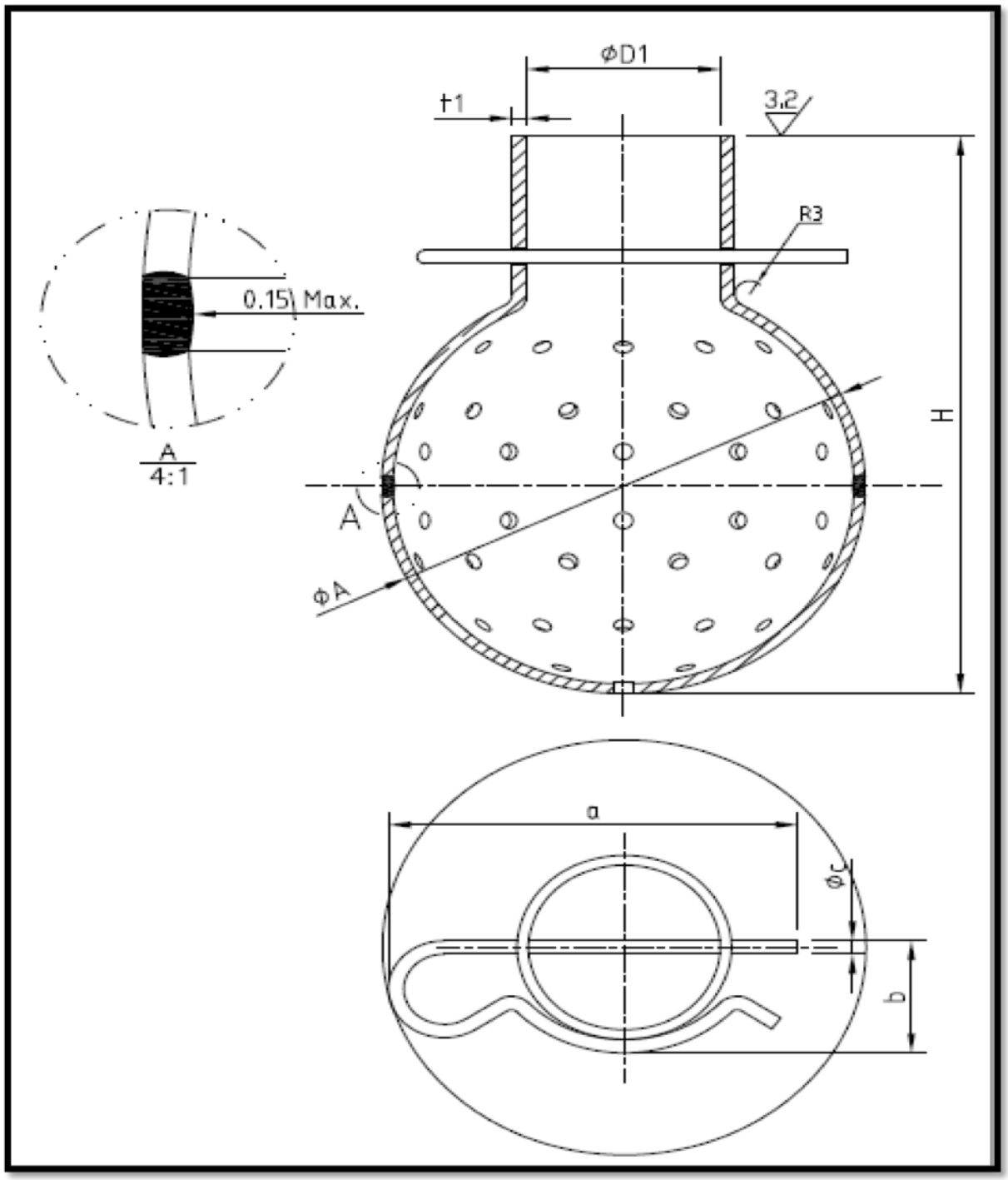

Size	A	B	C	D1	H	Q	i1
1”	2.519	0.681	0.126	1.016	3.386	2.134	0.071
1.5”	2.953	1.007	0.126	1.512	3.843	3.157	0.071
2”	3.543	1.338	0.157	2.016	4.409	4.193	0.090

T316L Rotating Spray Ball

Features of the T316L Rotating Spray Ball:

360°Spray Pattern

¾” NPT, 1.5” NPT, 1.5” Clamp Connections

Used to clean tanks or vessels

Ball Bearings are made from Stainless Steel

OD Mirror Finish

1-888-909-3569 or 1-855-640-7871

T316L Rotating Spray Ball Dimensions:

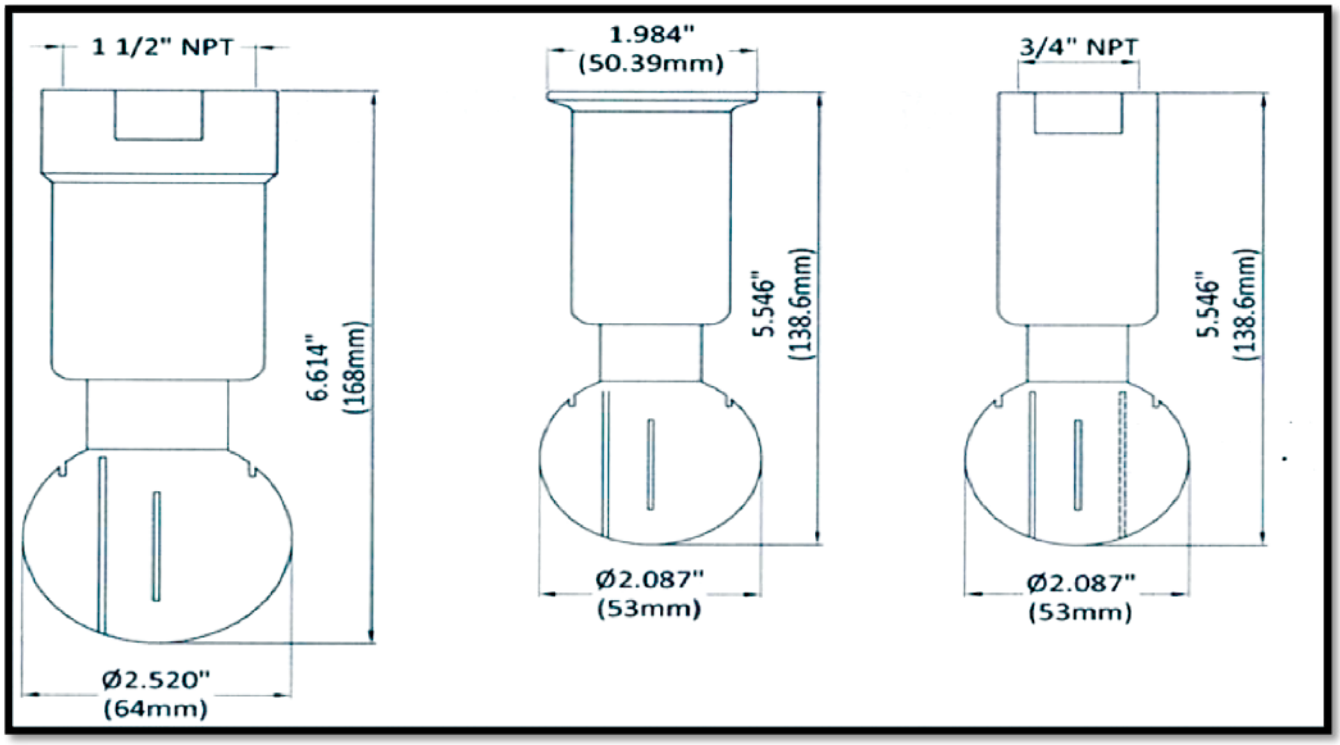

Tube OD Size	Connection	A	B
¾”	NPT	¾” NPT	5.460”
1.5”	NPT	1.5” NPT	5.460”
1.5”	Clamp	1.980”	5.460”

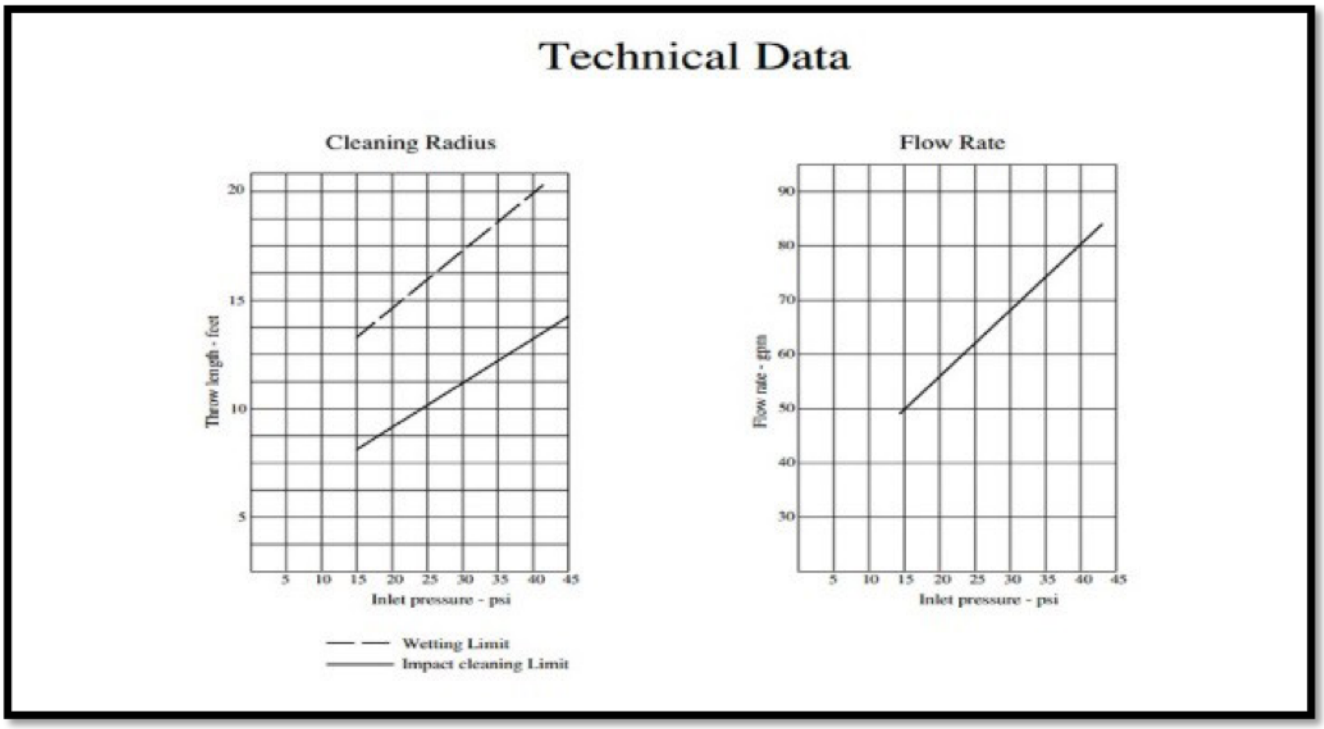

T316L Stationary Spray Ball

Features of the T316L Stationary Spray Ball:

Multiple spray patterns for your needs

Found in the beverage, brewery, and food industries

Fixed and ready to be placed to a pipe or tube

Spray Pattern: 180°Bottom, 180°Top, 360°

T316L/Polished to a Sanitary Finish

E-Mail Confirmation with Tracking Number to you “Live” People Answering your call

T316L Stationary Spray Ball

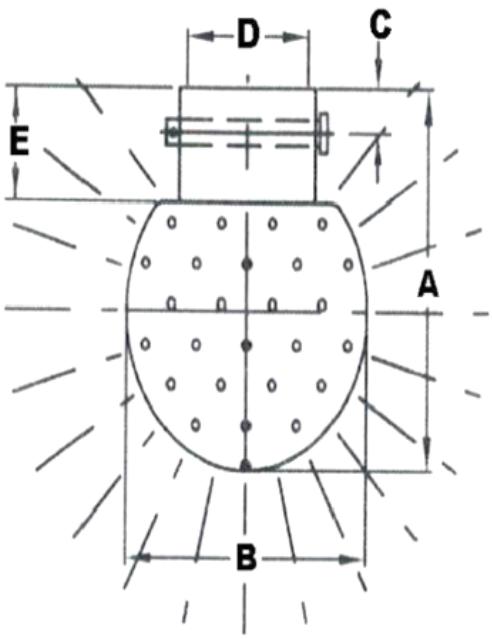

360° Pattern

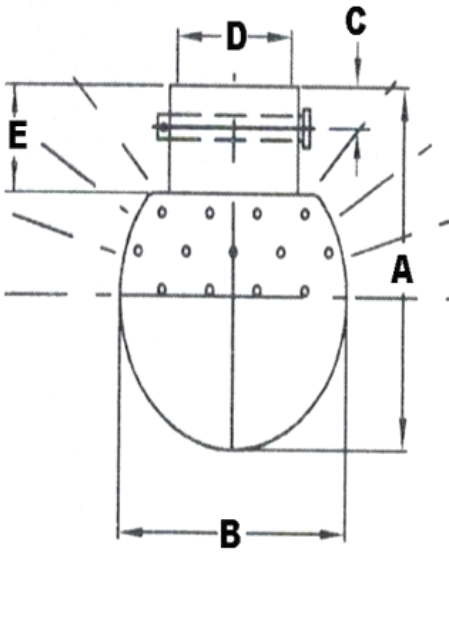

180° Top Pattern

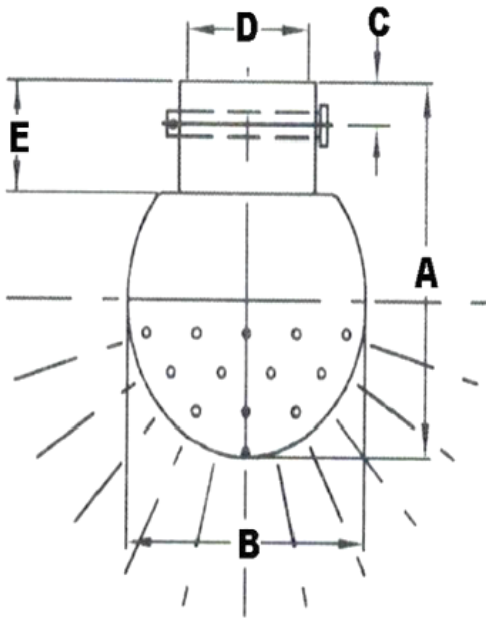

180° Bottom Pattern

Technical Data

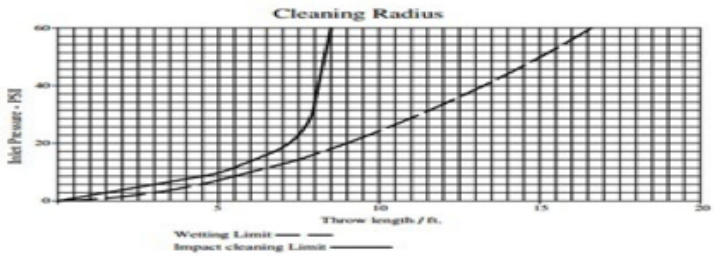

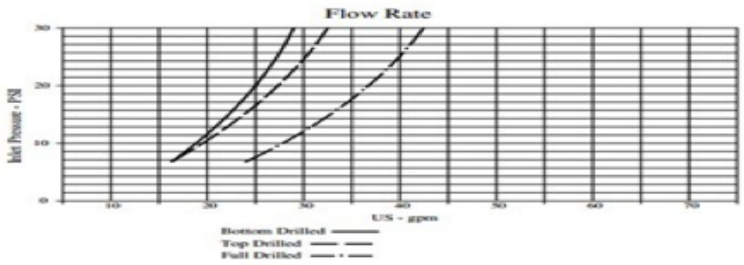

Size	Spray Pattern	A	B	C	D	E	Pin Size	Pin Length
1”	180°Bottom	2.95	3.54	.445	1.005	.975	.226	1.47
1.5”	180°Bottom	2.95	3.54	.445	1.005	.975	.226	1.95
1”	360°Pattern	3.04	2.50	.445	1.005	.975	.226	1.47
1.5”	360°Pattern	3.55	2.95	.445	1.005	1.05	.226	1.95
1”	180°Top	2.95	3.54	.445	1.005	.975	.226	1.47
1.5”	180°Top	2.95	3.54	.445	1.005	.975	.226	1.95

SANITARY SOLUTIONS INC.

Bulldog Fittings/Valves...Bulldog Tough.

In-Line Sight Glass

3
65-01

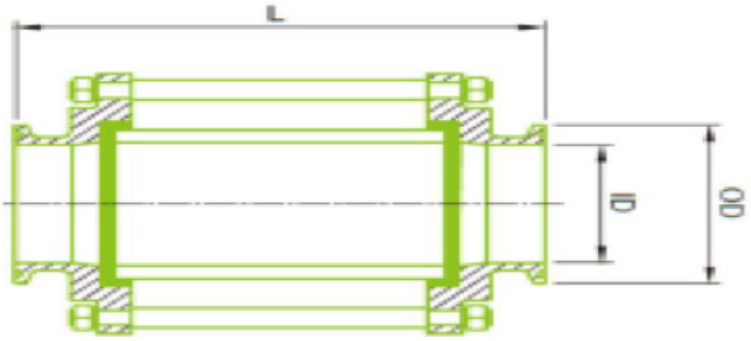

SIZE	ID	OD	Length	Part Number
1”	0.870	1.988	5.374	SS54ILSG-1-316L
1.5”	1.370	1.988	5.374	SS54ILSG-1.5-316L
2”	1.870	2.519	5.374	SS54ILSG-2-316L
2.5”	2.374	3.051	5.374	SS54-ILSG-2.5-316L
3”	2.870	3.582	5.374	SS54ILSG-3-316L
4”	3.838	4.685	6.948	SS54ILSG-4-316L

T316L Sight Glass Material Breakdown

SIGHT GLASS

NO	PART NAME	QTY	Material
1	Body	2	SS304/SS316L
2	Seal	2	EPDM/Silicon/Viton/PTFE
3	High pressure clean glass	1	Glass
4	Screw bolt	1"~3"=4 4"~6"=6	SS304
5	M6 Nut M8 Nut	1"~3"=8 4"=12 6"=12	SS304
6	M6 Ring M8 Ring	1"~3"=8 4"=12 6"=12	SS304

Glass Composition

Content	SiO_2	Al_2O_3	Fe_2O_3	B_2O_3	Na_2O	K_2O
%	80.0	2.2	0.02	12.7	4.0	0.04

Physical Properties

Description	Value
Spectific heat (25°) Average(25-400°C)	0.17 cal/g.°C 0.233 cal°C
Thermal Conductivity (25°C) (100°C)	0.0026 cal/cm.sec°C 0.0030 cal/cm.sec°C
Linear coefficientof Expansion	32.5-10^{-7}/°C
Density	2.23g/cm^3

Mechanical strength of internal pressure of SIMAX borosilicate glass tubes

Size	1"	1.5"	2"	2.5"	3"	4"
Max.Pressure (Bar)	13	10	12	9	8	6

SANITARY SOLUTIONS INC.

Bulldog Fittings/Valves...Bulldog Tough.

Sanitary Solutions Custom Fabrications

Custom fabrications examples in a quick manner:
3-A Sweep Elbows Spool Pieces Instrument Tees
Dip Tube Assemblies Manifolds Napkin Drawings
Large Diameter Fittings Sized & Polished to a Sanitary Finish

The Sanitary Solutions Team is ready to serve you in a timely manner to assist you when you need a custom fabrication. Our eam will supply you with a drawing for your review and a time that the product will ship to meet your needs.

SANITARY SOLUTIONS INC.

Bulldog Fittings/Valves...Bulldog Tough.

Sanitary Solutions Custom Fabrications

Sanitary Solutions is your source for the only 3-A Swivel Joint in multiple styles. With sizes 1”—6” to choose from, 316L alloy , polished to a sanitary finish and multiple styles to choose, we are our choice.

So, what does a Swivel Joint do? Swivel joints provide torsional rotation between flow lines to allow hoses to pivot to reduce stretching, twisting or bending. Notice the bearing washer and face seal—these parts are instrumental for increased load distribution on the line.

SANITARY SOLUTIONS INC.

Bulldog Fittings/Valves...Bulldog Tough.

Sanitary Solutions Swivel Joint Breakdown

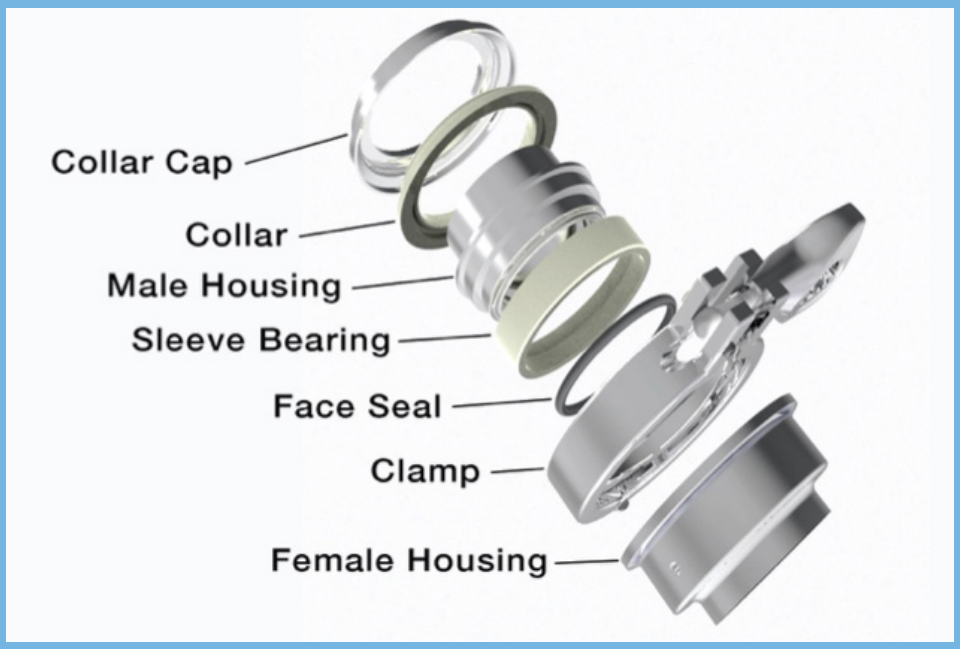

Features & Benefits of the 3A Swivel Joint:

Clamp or Weld Connections

3A Hygienic Design

316 Stainless

360° Rotation

Temperature Range to 360°F

Polished to a 32 Ra Finish

Clean in Place

Seals: Buna, EPDM, Silicone, Viton®

Low or High Pressure

SANITARY SOLUTIONS INC.

Bulldog Fittings/Valves...Bulldog Tough.

Sanitary Solutions Swivel Joint Styles

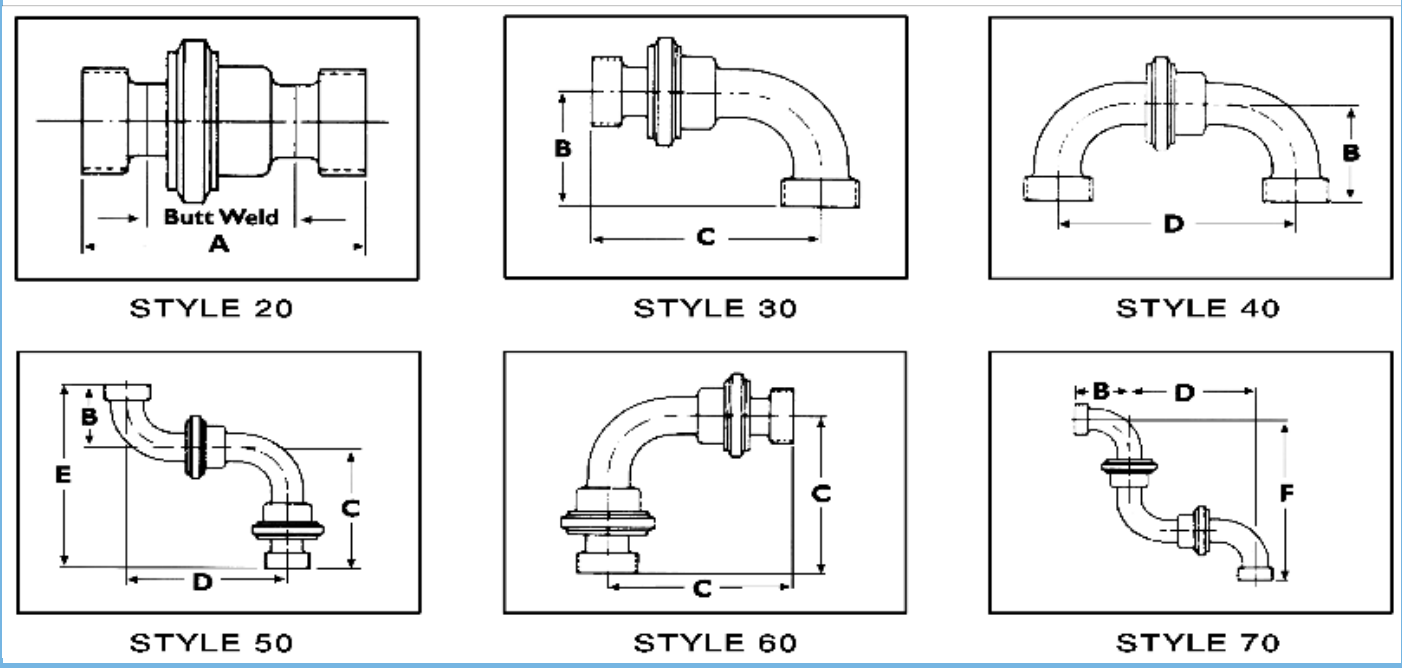

STYLE 20 STYLE 30 STYLE 40

STYLE 50 STYLE 60 STYLE 70

Clamp Connections

SIZE	A	A IF BUTT WELD	B	C	D	E	F
1.5	3	2	2 3/4	4 3/4	6 1/2	7 1/2	9 1/4
2	3	2	3 1/2	5 1/2	8	9	11 1/2
2.5	3	2	4 1/4	6 1/4	9 1/2	10 1/2	13 3/4
3	3	2	5	7	11	12	16
4	5 3/16	2 15/16	6 5/8	9 5/16	14 15/16	15 15/16	21 9/16

Thread Connections

SIZE	A	A IF BUTT WELD	B	C	D	E	F
1.5	3 7/16	2	2 21/32	4 31/32	6 1/2	7 15/16	9 17/32
2	3 7/16	2	3 23/32	5 23/32	8	9 7/16	11 23/32
2.5	3 9/16	2	4 17/32	6 17/32	9 1/2	11 1/16	14 1/32
3	4 11/16	2	5 11/32	7 11/32	11	12 11/16	16 11/32
4	5	2 15/16	7 1/32	9 31/32	14 15/16	17	21 31/32

Sanitary Clamp Fitting

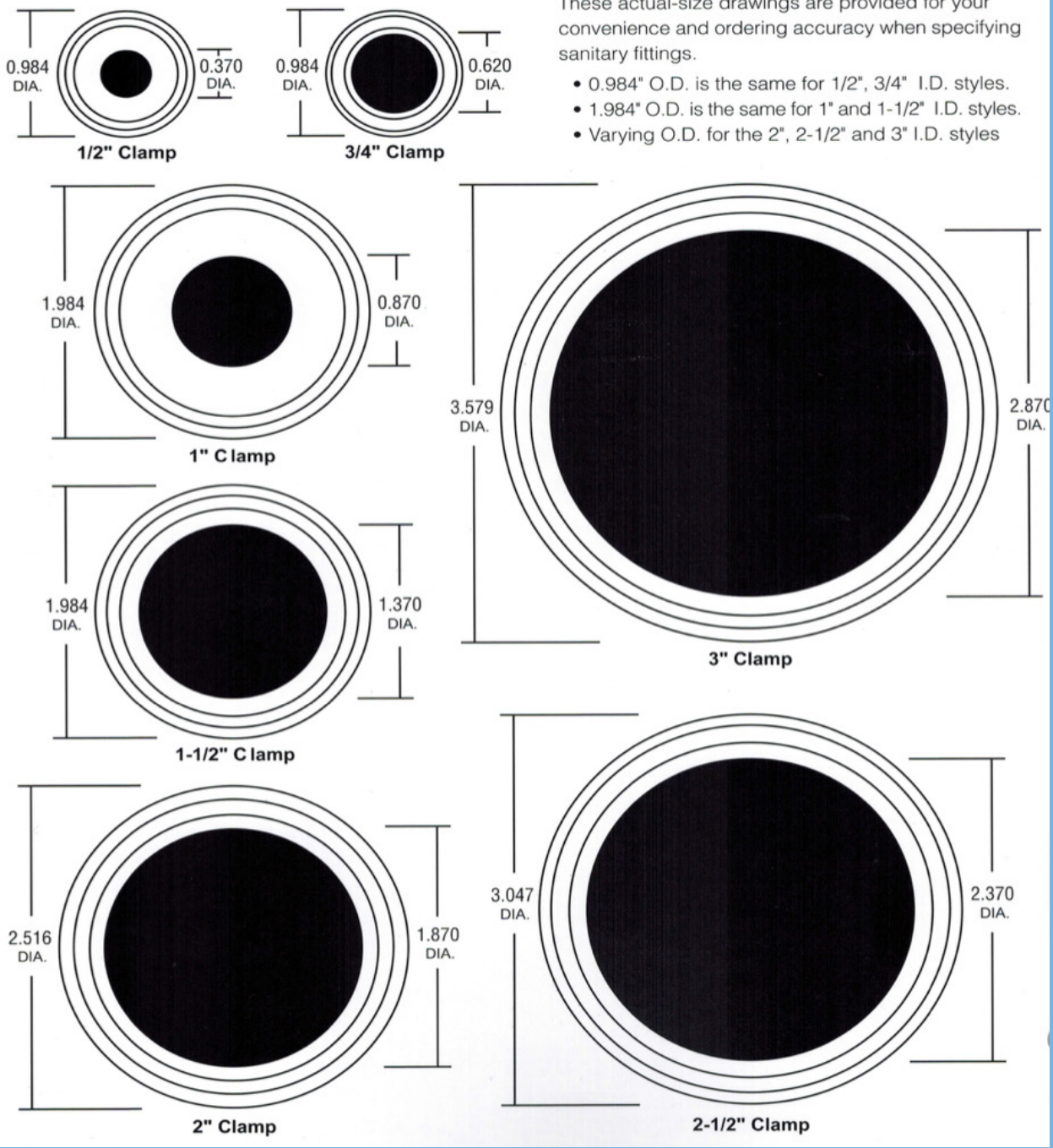

These actual-size drawings are provided for your convenience and ordering accuracy when specifying sanitary fittings.

- 0.984" O.D. is the same for 1/2", 3/4" I.D. styles.
- 1.984" O.D. is the same for 1" and 1-1/2" I.D. styles.
- Varying O.D. for the 2", 2-1/2" and 3" I.D. styles

Nine Warehouses of Sanitary in the Same Spot

33- C T316L Overstock Product

34-C ½”—12” Tube Overstock

35-C T316L Tube Stock

Daily UPS® Pick-Up by 6:30 PM

37-C T304 Tube Stock

39-C T 304 Overstock Product

41-C Valve Overstock

Nightly Truck Pick-Up by 7:00 PM

43- C T304 Overstock Weld Fittings

45-C T304 Overstock Clamp Fittings

Fittings are Capped & Bagged, with Part Number, Size& Alloy

Fittings, Tubing, Valves and Accessories are Computer Etched

Notes

Notes

Sanitary Solutions Warranty

Sanitary Solutions, Inc. warrants only to the original purchaser of that product. That product of Sanitary Solutions, Inc. manufacture is free from defects in material and workmanship for a period of one (1) year from the date of shipment, provided product was placed in normal use, recommend in accordance with recognized sanitary equipment practice, and that product was not worn out due to severe service, such as placed in extremely corrosive or abrasive environment.

This warranty is expressly in lieu of any other warranties, implied or expressed including, but not limited to, any implied warranty of merchantability of fitness for a purpose or otherwise.

Purchaser's sole and exclusive remedy and Sanitary Solutions, Inc. maximum liability for claims arising here under or negligence for all losses and damages resulting from any cause shall be either the repair or replacement of defective items or, at Sanitary Solutions, Inc, option, the refund of the purchase price for such items. In no event, including in the case of the claim for negligence, shall Sanitary Solutions, Inc. be libel for incidental or consequential damages, including loss of profits. In no event shall the liability of Sanitary Solutions, Inc. be greater than the sale price of the product.

All claims must be in writing and must be mailed or delivered by purchaser within thirty (30) days after purchaser learns of the facts upon which such claim is based. Any claim not made in writing and within the time specified above shall be deemed waived. Purchaser has thirty (30) days to return product after Sanitary Solutions, Inc. writes purchaser that is exercising its option to accept return.

.

Return of Goods Policy

All returned merchandise must have a Sanitary Solutions, Inc. RGA (Return Goods Authorization) number. RGA numbers are assigned only by Sanitary Solutions, Inc. sales team and product returned must correspond with product authorized. Returns must be made within thirty (30) days of receipt of RGA.

Unauthorized returns will not be accepted by Sanitary Solutions, Inc. receiving department and returned freight collect. A 20% restocking charge (20% of the invoice price) will be charged for the saleable merchandise in new condition and returned in original packaging. If merchandise is not in new condition, a reconditioning charge will be deducted from the credit. Merchandise not of Sanitary Solutions, Inc. manufacture or custom fabrications are not eligible for return.

* Freight is to be prepaid. No collect shipments will be accepted. *

SANITARY SOLUTIONS INC.

Bulldog Fittings/Valves...Bulldog Tough.

Sanitary Solutions sells to and supports distributors throughout the United States, Canada and South America who work with end-users in the Bakery, Beverage, Brewery, Chemical Processing, Cosmetic, Dairy Processing, Food Process Industries and Water Filtration.

Sanitary Solutions has (9) Warehouses of product in one location in West Columbia, South Carolina to service and ship your product complete the day you place the order. We offer our distributors the option of picking up the product or shipping either UPS®, Fed Ex®, or by truck. In fact, we have LATE pick-up hours from each of the carriers and have a national truck parked in front of our warehouses for late pick-up!

Sanitary Solutions is different from the competition in that:

Our Sales team are solution makers who deal only in the Sanitary Stainless Market.

Our Sales team answers your call without going to voice mail, provides you with one on one solutions in a personal and understanding manner.

Our Sales team sends e-mail, tracking and faxed confirmation for either quotes or products purchased that day. This way the distributor can alert his customer promptly.

Sanitary Solutions ships product that is capped, bagged, stamped with the size, alloy, heat number and bar coded with our logo.

Being a small, family-owned company is very tough these days. We know that to succeed, our growth is predicated on the dedicated growth of our distribution network. As your supplier, our team honors the "Golden Rule." We want to grow with you in honesty and integrity, and give you comfort in knowing that we supply quality products backed by competitive pricing.

The Sanitary Solutions team looks forward to your call so as opportunities arise, please call us toll free below or check us out via: www.sanitarysolutions.com

www.sanitarysolutions.com

Toll-Free: 888-909-3569 or 855-640-7871