Zekelman Industries

Wheatland Tube
A DIVISION OF ZEKELMAN INDUSTRIES

STD. BLK. PE/TC AND ALSO STD GALV PE/TC

1/2" PIPE
127 PIECES
2267 LBS .85 LB/FT
7,8,9,10,11,12,13,12,11,10,9,8,7

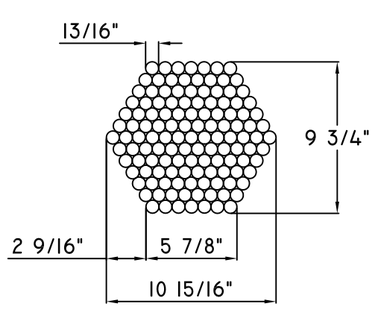

3/4" PIPE
91 PIECES
2159 LBS 1.13 LB/FT
6,7,8,9,10,11,10,9,8,7,6

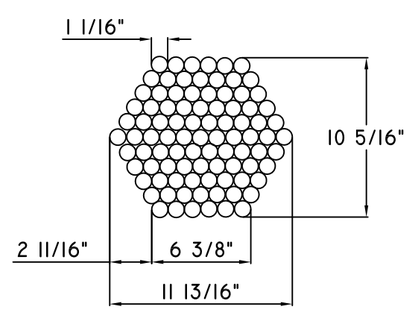

1" PIPE
70 PIECES
2470 LBS 1.68 LB/FT
6,7,8,9,10,9,8,7,6

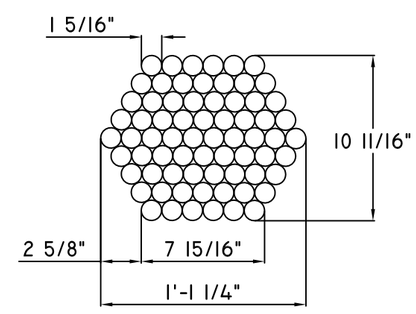

1 1/4" PIPE
51 PIECES
2431 LBS 2.27 LB/FT
6,7,8,9,8,7,6

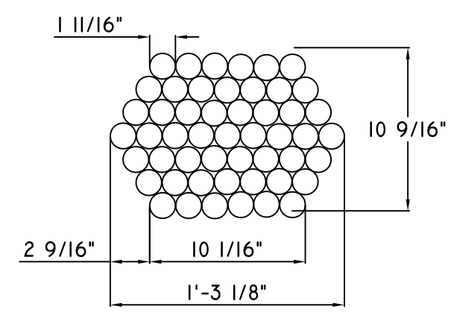

1 1/2" PIPE
44 PIECES
2513 LBS 2.72 LB/FT
5,6,7,8,7,6,5

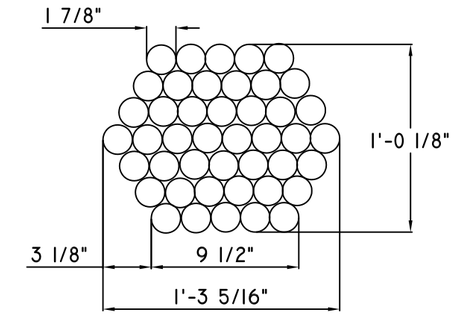

2" PIPE
30 PIECES
2300 LBS 3.65 LB/FT
4,5,6,6,5,4

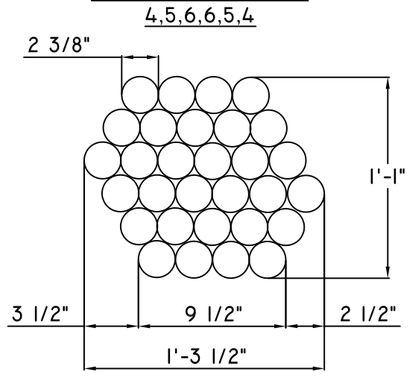

2 1/2" PIPE
20 PIECES
2432 LBS 5.79 LB/FT
4,5,6,5

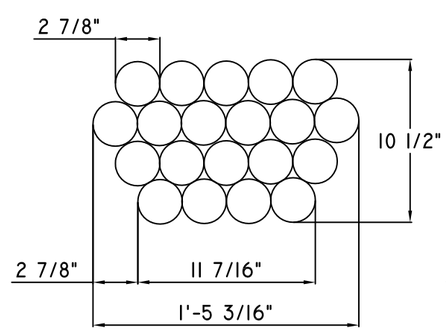

3" PIPE
13 PIECES
2069 LBS 7.58 LB/FT
4,5,4

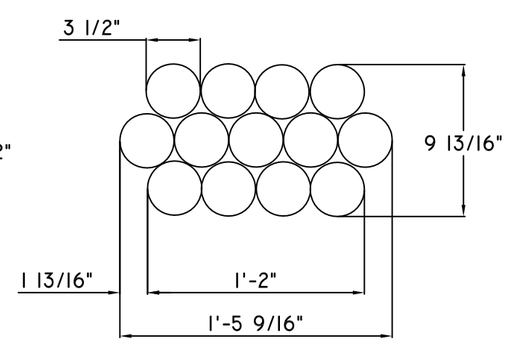

3 1/2" PIPE
10 PIECES
1913 LBS 9.11 LB/FT
3,4,3

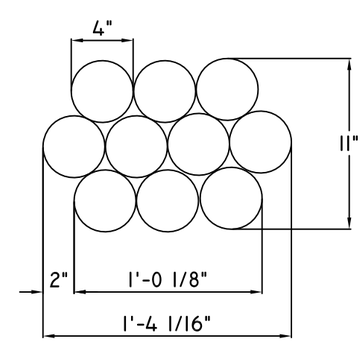

4" PIPE
10 PIECES
2266 LBS 10.79 LB/FT
3,4,3

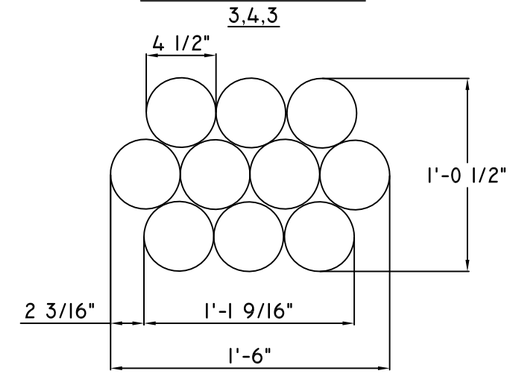

X-HVY BLK. PE/TC AND ALSO X-HVY GALV PE/TC

1/2" PIPE
91 PIECES
2083 LBS 1.09 LB/FT
6,7,8,9,10,11,10,9,8,7,6

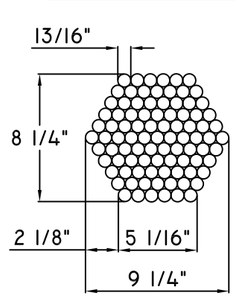

3/4" PIPE
79 PIECES
2455 LBS 1.48 LB/FT
7,8,9,10,11,10,9,8,7

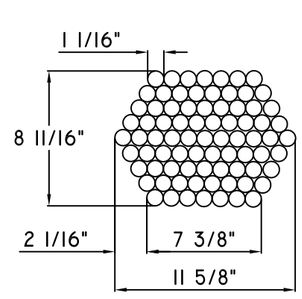

1" PIPE
44 PIECES
2005 LBS 2.17 LB/FT
5,6,7,8,7,6,5

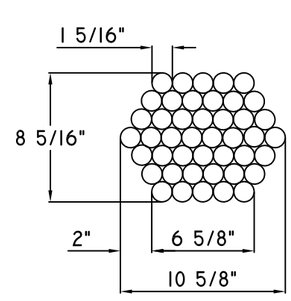

1 1/4" PIPE
34 PIECES
2142 LBS 3.00 LB/FT
6,7,8,7,6

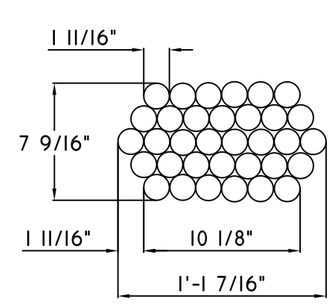

1 1/2" PIPE
29 PIECES
2211 LBS 3.63 LB/FT
5,6,7,6,5

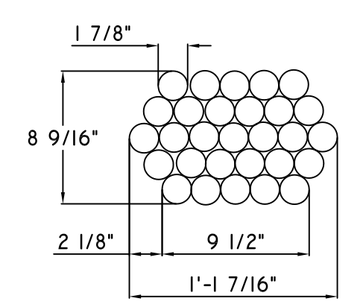

2" PIPE
19 PIECES
2007 LBS 5.03 LB/FT
3,4,5,4,3

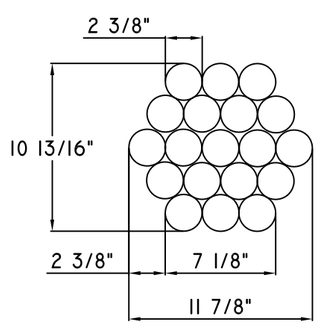

2 1/2" PIPE
13 PIECES
2094 LBS 7.67 LB/FT
4,5,4

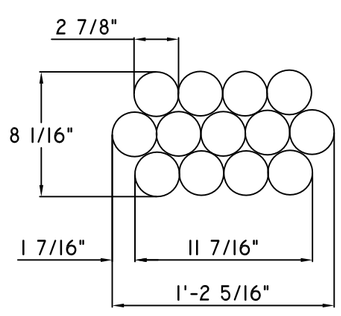

3" PIPE
10 PIECES
2155 LBS 10.26 LB/FT
3,4,3

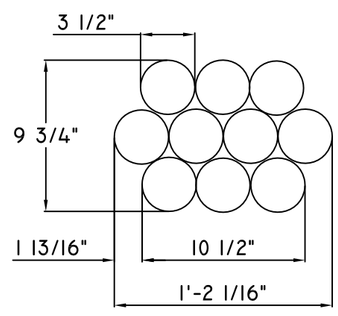

3 1/2" PIPE
10 PIECES
2629 LBS 12.52 LB/FT
3,4,3

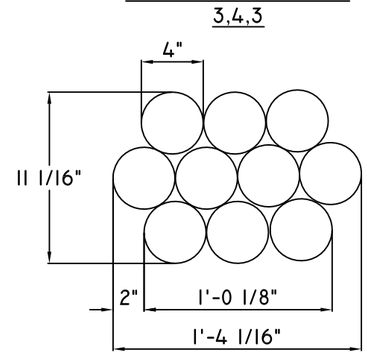

4" PIPE
7 PIECES
2205 LBS 15.00 LB/FT
2,3,2

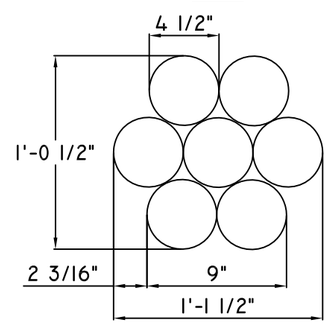

AS OF FEB 5, 2015