DIXON

The Riaht Connection®

Cam & Groove Couplings and Accessories

dixonvalve.com

Customer Service
877.963.4966

• Uncommon Excellence • Uncommon Excellence • Uncommon Excellence • Uncommon Excellence • Jncommon Excellence • Uncommon Excellence • Uncommon Excellence • Uncommon

Table of Contents

Cam & Groove General Information 3-7
- **Swivel Couplings 8-12**
- Type A and E Adapters 8
- Type C and D Couplers 8

Venting EZ Boss-Lock 9
- Type B, C, and D Couplers 9
- Type H Dust Cap 9

EZLink® 10
- Type C EZLink® 10
- Type B EZLink 11
- Type D EZLink 12
- Type DC EZLink 13
- Accessories 14

Vent-Lock® 15-22
- Type A Vent-Lock® Adapters 15
- Type C Vent-Lock Couplers 16
- Type C Vent-Lock Safety EZ Boss-Lock Couplers 17
- Type D Vent-Lock EZ Boss-Lock Couplers 18
- Type E Vent-Lock Adapters 19
- Type DC Vent-Lock Safety 20
- Type H Vent-Lock Safety EZ Boss-Lock DC 21
- Vent-Lock Safety Accessories 22
- Type DP Vent-Lock Safety 22

Dixon® Boss-Lock, EZ Boss-Lock, Basic 23-71
- Type A Dixon® Adapters 23-24
- Type B Dixon Couplers 25-26
- Type B Boss-Lock Couplers 27-28
- Type B EZ Boss-Lock 29
- Type B EZLink 26
- Type B Dixon 27
- Type B Boss-Lock 28
- Type B EZ Boss-Lock 29
- Type C Dixon Couplers 30
- Type C Dixon Couplers Notched NOS Shank 31
- Type C Boss-Lock Couplers 32
- Type C EZ Boss-Lock Couplers, Collared Hose Shank 32
- Type C Boss-Lock Couplers Notched Shank 33
- Type C EZ Boss-Lock Couplers, Photo Finish Shank 34
- Type C EZ Boss-Lock Couplers, Notched Hose Shank .. 35-36
- Type D Boss-Lock Couplers 37
- Type D Dixon Coupler Dimensions 38
- Type D Boss-Lock Couplers, Dimensions 39-40
- Type D EZ Boss-Lock Couplers, Dimensions 41-42
- Type E Dixon Adapters, Dimensions 43-44
- Type F Dixon Adapters, Dimensions 45-46
- Type E Dixon Adapters Swaged Ferrule 47
- Type E Dixon Adapters Notched Shank, Ferrules 47
- Type E Dixon Adapters Notched NOS Shank, Ferrules 48
- Type DC Dixon Dust Caps, Dimensions 49-50
- Type DC Dixon Lockable Dust Caps 51
- Type H Boss-Lock Dust Caps, Dimensions 51-52
- Type H EZ Boss-Lock Dust Caps, Dimensions 53
- Type DP Dixon Dust Plugs, Dimensions 54-55

Jump Size & Other Configurations 56-71
- Type A, E, and F Hastelloy® Adapters 56
- Type B, C, and D EZ Boss-Lock Hastelloy® Couplers 57
- Type DA Dixon Couplings with Port 58
- Type DA Dixon Jump Size Couplings 58
- Type DA Boss-Lock Jump Size Couplings 59
- Type DA EZ Boss-Lock Jump Size Couplings 59
- Type DA Dixon Jump Size Couplings with Port 59
- Type AA Spool Adapters 60
- Type DD Dixon Couplers 60
- Type DD Boss-Lock Couplers 60
- Type A Jump Size Adapters 61
- Type B and C Dixon Jump Size Couplers 61

Jump Size 61-62
- Type C EZ Boss-Lock Jump Size Coupler 61
- Type D and F Dixon Jump Size Couplers 62
- Type E Jump Size Adapters 62

Elbows 63-65
- Type DA and DD Dixon 45° 63
- Type DA, DD, A, B, C, D, E, and F Dixon 90° 63-65
- Type F Dixon 15° 65

Flanges 66
- Adapter X 150# Flange 66
- Adapter X 150# ANSI Flange 66
- Dixon Coupler X 150# Flange 66
- EZ Boss-Lock Coupler X 150# Flange 66

Welds 67
- Dixon Coupler Socket Weld to Schedule 40 Pipe 67
- Dixon Coupler Butt Weld to Schedule 40 Pipe 67
- EZ Boss-Lock Coupler Socket Weld to Schedule 40 Pipe .. 67
- EZ Boss-Lock Coupler Butt Weld to Schedule 40 Pipe 68
- Adapter Socket Weld to Schedule 40 Pipe 68
- Adapter Butt Weld to Schedule 40 Pipe 68
- Dixon Weld to Tube Cam and Groove 69

Other 69
- Cam and Groove Transition Fittings 69
- Adapter x Female NPSM 70
- Boss-Lock Coupler x Female NPSM 70
- Dixon® Coupler x Adapter Wye 70
- Cam & Groove Hydrant Adapters 70
- Boss-Lock Coupler x Tube with 45° Cut 71
- In-Line Sight Glasses 71

Handles 72-73
- Cam & Groove, Locking Dust Cap, and Boss-Lock 72
- EZ Boss-Lock, Paddle, and Dixon Paddle 73

Gaskets 74-77
- Dimensions and Color Codes 74
- Cam & Groove 75
- Fuel and PTFE 76
- Encapsulated and Accordion 77

Accessories 78-80
- Strainers and Pull Rings 78
- Inserts, Clips, Chains, and Straps 79
- Lanyards 80

Global Cam & Groove 81-90
- Type A Adapters 81
- Type B Couplers 82
- Type C Crimp Style Cam & Groove 82
- Type C, D Couplers 83-84
- Type E Crimp Style Cam & Groove 84
- Type E and F Adapters 85
- Type DC and DP Dust Caps/Plugs 86
- Type DA Jump Size Couplings 87
- Type AA Spool Adapters 87
- Type DD Couplers 87
- Type A and E Jump Size Adapters 88
- Type C Jump Size Couplers 88
- TTMA Flange Coupler, Adapter 88
- ANSI Flange Coupler, Adapter 89
- Coupler Handles, Safety Clip 89
- BSP Thread Cam & Groove 90
- Cam & Groove x NST 91

Polypropylene 92-96
- Adapters 92, 94
- Couplers 92,93
- Dust Caps, Plugs 95
- Elbows 96

Railroad 97-100
- Tank Car
  - Railroad Connections 97-98
  - Assemblies/Adapters 99
  - Gaskets 100

Ordering System

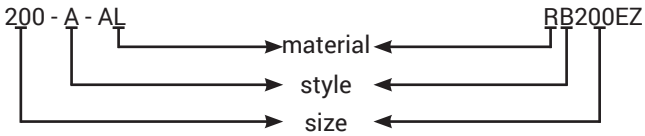

Size represents the coupler or adapter and hose or pipe end (i.e. 200 = 2"). If the coupling is a jump size, the coupler or adapter is the first size (i.e. 4030-C is 4" coupler to 3" hose shank).

Operation of Cam & Groove

1. To make connection, slide the adapter into the coupler and, with normal hand pressure, press the cam levers down.

2. Uncoupling is as quick and simple as coupling. Just lift the cam levers and remove the adapter.

Specifications on Dixon® Cam & Groove

Specifications

- Dixon, Boss-Lock, and EZ Boss-Lock cam & groove couplers and adapters are produced to interchange with all product produced to Commercial Item Description A-A-59326D.
- No standard exists for the 1/2", 5", and 8" fittings, and generally these sizes do not interchange with other manufacturers' products.
- Dust caps and dust plugs are **not** to be used in pressure applications for safety and environmental reasons.
- *Designed for use with liquids*; consult Dixon for specific recommendations.

Pressure Ratings

Recommendations based on the use of mating Dixon fittings at ambient temperature **70°F (21°C)** with standard nitrile rubber seal installed. For use at elevated temperature or other unusual operating conditions, consult Dixon. Dixon, Boss-Lock, and EZ Boss-Lock couplers' and adapters' maximum working pressures are as follows:

Size	1/2"	3/4" thru 2"	2-1/2"	3"	4"	5" and 6"	8"
PSI	**150**	**250**	**150**	**125**	**100**	**75**	**50**
PSI (working pressure with King Crimp® ferrule system)	**150**	**250**	**150**	**150**	**150**	**75**	**50**

Cam & Groove Nominal Take-Up Lengths

Coupling Size	Dimension A
1/2"	0.97"
3/4"	0.97"
1"	1.20"
1-1/4"	1.44"
1-1/2"	1.50"
2"	1.81"
2-1/2"	1.82"
3"	1.78"
4"	1.84"
5"	2.00"
6"	2.13"
8"	2.06"
8"	3.22"

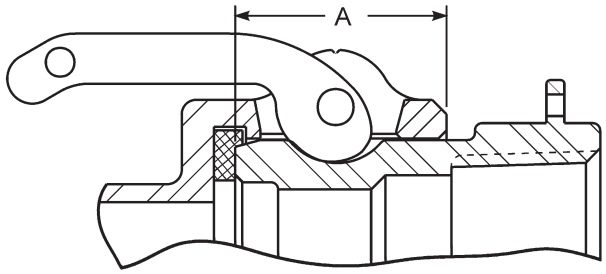

Cam & Groove Configurations

Configurations are representative of the Dixon® line of cam & groove.

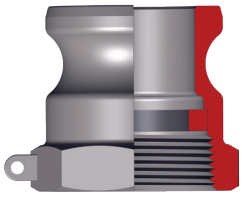

Type A
adapter x female NPT

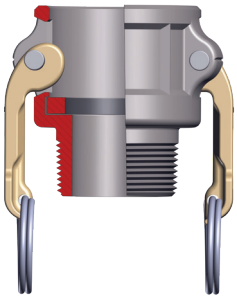

Type B
coupler x male NPT

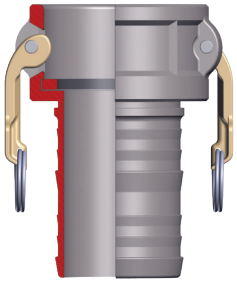

Type C
coupler x hose shank

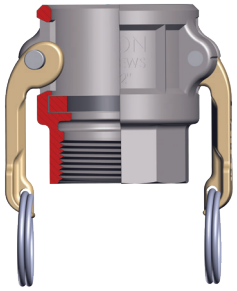

Type D
coupler x female NPT

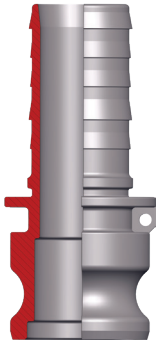

Type E
adapter x hose shank

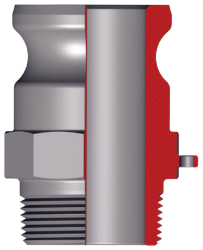

Type F
adapter x male NPT

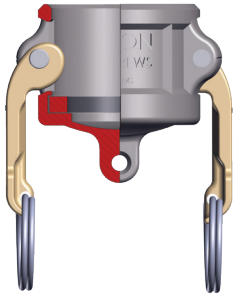

Type DC[1]
dust cap

Type DP[1]
dust plug

[1] Dust caps and dust plugs are not to be used in pressure applications for safety and environmental reasons.

⚠WARNING

Under no circumstances should cam & groove couplings be used for compressed air or steam service!

Dixon® Cam & Groove Styles

Dixon

Features

- Precision machined to rigid tolerances
- Durable stainless steel cam arm pins will not rust or bind, providing greater strength and safety
- Recess holds gasket firmly in place - ensures proper placement
- Long shank design allows proper banding, thus eliminating the major cause of hose damage

Dixon Global

Features

- Interchanges with all products produced to A-A-59326D
- All couplers include locking safety clip
- Aluminum couplers available with brass or stainless steel cam arms
- Brass fittings are produced by forging process providing greater structural integrity and mechanical strength

Boss-Lock

Features

- The cast-in lugs allow safety clips to be attached once the lugs are passed through slots in the special cam lever arms, providing a patented safety feature. The clips prevent the coupler from being unlocked until they are removed, providing a *positive locking action*.
- Boss-Lock investment stainless steel cam arms are guaranteed! Should you break a Boss-Lock investment stainless steel cam arm, return it to the nearest warehouse for a free replacement.
- The pull ring safety clip simplifies the locking action on Boss-Lock couplers. No more inserting clips or dangling lanyards, just a twist and it's locked, giving you a low-profile positive locking action.

EZ Boss-Lock

Features

- No more fumbling with clamps, wire, clips, or pins, just close the handles and the locking mechanism is engaged
- Extremely easy to open, the release lever is under your thumb when you want to open the fitting; ergonomic
- Can be supplied with custom shanks; also available with swaged and PF shanks for hard-to-couple chemical hoses
- EZ Boss-Lock investment stainless steel cam arms are guaranteed! Should you break one, return it to the nearest warehouse for a free replacement.

Dixon® Cam & Groove Styles

Vent-Lock® Safety

Features

- Safety release cam & groove couplings permit the release of static pressure when disconnecting hose assemblies
- Venting system protects operator from being sprayed with hazardous or non-hazardous fluids or solids
- Does not interchange with standard cam & groove products; use only with Vent-Lock L-style fittings

New

Venting EZ Boss-Lock

Features

- Unique Dixon system for safely venting systems under pressure
- Utilizes EZ Boss-Lock cam arms in addition to EZLink® tabs that create a secondary positive locking mechanism
- Connects to standard cam & groove adapters
- Design allows for a more ergonomic and safe experience for user

EZLink® Armless

Features

- Automatic couplers push-to-connect, providing a reliable connection
- Coupler tabs cannot be pushed to disconnect when pressurized to **20 PSI** or over
- Low profile allows easy connection and disconnection in tight applications
- Coupler push tabs can be locked with safety pins and/or zip tie

Crimp Fittings

Only use the crimp style shanks with the crimp style sleeves and ferrules. Due to differences in dimensions and tolerances for safety reasons, do not interchange other manufacturer's products with Dixon® products.

Cam & Groove

Styles offered
- Dixon type C couplers
- EZ Boss-Lock type C couplers
- Dixon type E adapters
- Global type C couplers
- Global type E adapters

Sizes
- 1", 1-1/4", 1-1/2", 2", 3", 4", 6"

Materials
- 356T6 aluminum
- Brass
- 316 stainless steel
- Unplated ductile iron

Sleeves and Ferrules

Styles offered
- Sleeve (1", 1-1/4", 1-1/2", 2", 3", 4", 6")
- Ferrule (1", 1-1/4", 1-1/2", 2", 3", 4", 6")

Materials
- Carbon steel
- 304 stainless steel
- Aluminum (1", 1-1/4", 1-1/2", and 2" sleeves)

- For a complete listing of products in the King Crimp® system please visit dixonvalve.com.
- Contact Dixon at 877.963.4966 for specific crimp recommendations.

Swivel Couplings Cam & Groove

New

Features
- Live swivel is capable of 360-degree rotation under pressure
- Nitrile rubber X-ring seals for reduced friction and high stability in dynamic applications
- Couplers include EZ Boss-Lock cam arms

Material
- Gasket: nitrile rubber

Type A Adapter
Adapter x Female NPT

Size	356T6 Aluminum Part #	316 Stainless Steel Part #
2"	200-A-ALSWIV	200-A-SSSWIV
3"	300-A-ALSWIV	300-A-SSSWIV
4"	400-A-ALSWIV	400-A-SSSWIV

Type C Coupler
Coupler x Hose Shank

Size	356T6 Aluminum Part #	316 Stainless Steel Part #
2"	AC200EZSWIV	RC200EZSWIV
3"	AC300EZSWIV	RC300EZSWIV
4"	AC400EZSWIV	RC400EZSWIV

Type D Coupler
Coupler x Female NPT

Size	356T6 Aluminum Part #	316 Stainless Steel Part #
2"	AD200EZSWIV	RD200EZSWIV
3"	AD300EZSWIV	RD300EZSWIV
4"	AD400EZSWIV	RD400EZSWIV

Type E Adapter
Adapter x Hose Shank

Size	356T6 Aluminum Part #	316 Stainless Steel Part #
2"	200-E-ALSWIV	200-E-SSSWIV
3"	300-E-ALSWIV	300-E-SSSWIV
4"	400-E-ALSWIV	400-E-SSSWIV

NOTE: Hose shanks are suitable for use with King Crimp® sleeves and ferrules; for a complete listing of products in the King Crimp system please visit dixonvalve.com.

Venting EZ Boss-Lock Cam & Groove

New

Application
- Transfer of fluids and solids, with a safe disconnection

Sizes
- 2", 3", and 4"

Features
- In the event of an accidental disconnection under pressure, the venting feature retains the coupling and allows the stored pressure to vent off
- Provides a venting feature when used with standard cam adapters
- The safety venting feature of this coupling doesn't require a special adapter to work as a system

Materials
- Couplings and dust caps: 316 stainless steel, 356T6 aluminum
- Gasket: Nitrile rubber

Type B Coupler
Coupler x Male NPT

Size	356T6 Aluminum Part #	316 Stainless Steel Part #
2"	ALBEZ200	RLBEZ200
3"	ALBEZ300	RLBEZ300
4"	ALBEZ400	RLBEZ400

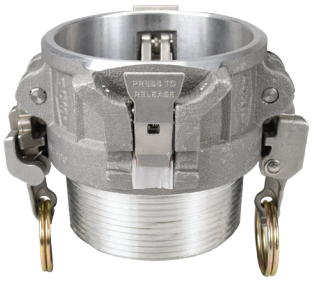

Type C Coupler
Coupler x Hose Shank

Size	356T6 Aluminum Part #	316 Stainless Steel Part #
2"	ALCEZ200 [1]	RLCEZ200 [1]
3"	ALCEZ300 [1]	RLCEZ300 [1]
4"	ALCEZ400 [1]	RLCEZ400 [1]

[1] Hose drop shank

Type D Coupler
Coupler x Female NPT

Size	356T6 Aluminum Part #	316 Stainless Steel Part #
2"	ALDEZ200	RLDEZ200
3"	ALDEZ300	RLDEZ300
4"	ALDEZ400	RLDEZ400

Type H
Dust Cap

Size	356T6 Aluminum Part #	316 Stainless Steel Part #
2"	ALHEZ200	RLHEZ200
3"	ALHEZ300	RLHEZ300
4"	ALHEZ400	RLHEZ400

EZLink® Armless Type C Couplers

Applications
- Transfer and/or unloading of fuels (gasoline or diesel) from tank truck to storage tanks
- Transfer of liquids compatible with the available coupling and gasket materials

Features
- Automatic couplers push-to-connect, providing a reliable connection
- Low profile allows easy connection and disconnection in tight applications
- Coupler push tabs can be locked with safety pins and/or zip tie
- Compatible with standard cam & groove adapters
- Lifetime warranty on stainless steel tabs

Materials
- Couplings and dust caps: 356T6 aluminum, 316 stainless steel
- Coupler tabs and springs: 316 stainless steel
- Gasket: nitrile rubber

Specifications
- Maximum working pressure with King Crimp® ferrules: 1-1/2" - 2" **250 PSI**, 3" and 4" **150 PSI**
- Maximum working pressure with crimp sleeves: 1-1/2" - 2" **250 PSI**, 3" **125 PSI**, 4" **110 PSI**
- Maximum working pressure with band clamps: 1-1/2" - 2" **250 PSI**, 3" **125 PSI**, 4" **100 PSI**
- Gasket temperature range: **5°F** to **180°F (-15°C** to **82°C)**

Only use EZLink gaskets and tabs for this coupling system. Traditional cam & groove handles and gaskets, or other types of seals, are not compatible and will fail.

Size	356T6 Aluminum Part #	316 Stainless Steel Part #
1-1/2"	EZL150-C-AL	EZL150-C-SS
2"	EZL200-C-AL	EZL200-C-SS
3"	EZL300-C-AL	EZL300-C-SS
4"	EZL400-C-AL	---

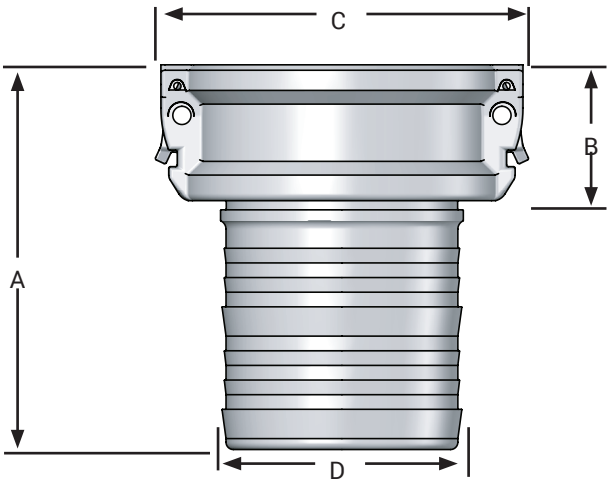

356T6 Aluminum Dimensions

	Size	1-1/2"	2"	3"	4"
A	overall length	4-5/16"	5-9/16"	6-1/2"	6-9/16"
B	coupler length	2-1/16"	2-3/16"	2-5/16"	2-5/16"
C	distance across ears	3-9/32"	3-21/32"	5-3/32"	6-3/16"
D	hose shank O.D.	1-9/16"	2-1/16"	3-3/32"	4-3/32"

316 Stainless Steel Dimensions

	Size	1-1/2"	2"	3"
A	overall length	4-5/16"	5-9/16"	6-1/2"
B	coupler length	2-1/16"	2-3/16"	2-5/16"
C	distance across ears	3-9/32"	3-21/32"	5-3/32"
D	hose shank O.D.	1-9/16"	2-1/16"	3-3/32"

EZLink® Armless Type B Couplers

Applications
- Transfer and/or unloading of fuels (gasoline or diesel) from tank truck to storage tanks
- Transfer of liquids compatible with the available coupling and gasket materials

Features
- Automatic couplers push-to-connect, providing a reliable connection
- Low profile allows easy connection and disconnection in tight applications
- Coupler push tabs can be locked with safety pins and/or zip tie
- Compatible with standard cam & groove adapters
- Lifetime warranty on stainless steel tabs

Materials
- Couplings and dust caps: 356T6 aluminum, 316 stainless steel
- Coupler tabs and springs: 316 stainless steel
- Gasket: nitrile rubber

Specification
- Gasket temperature range: **5°F** to **180°F (-15°C** to **82°C)**

Only use EZLink gaskets and tabs for this coupling system. Traditional cam & groove handles and gaskets, or other types of seals, are not compatible and will fail.

Coupler x Male NPT

Size	356T6 Aluminum Part #	316 Stainless Steel Part #
1-1/2"	EZL150-B-AL	EZL150-B-SS
2"	EZL200-B-AL	EZL200-B-SS
3"	EZL300-B-AL	EZL300-B-SS
4"	EZL400-B-AL	---

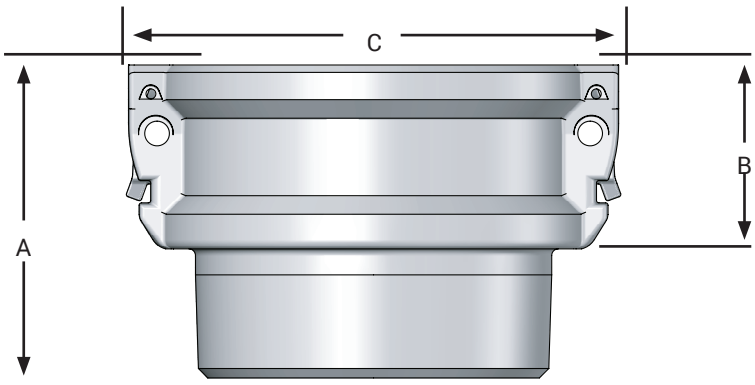

356T6 Aluminum Dimensions

	Size	2"	3"	4"
A	overall length	3-7/32"	3-7/8"	3-15/16"
B	coupler length	2-3/16"	2-5/16"	2-5/16"
C	distance across ears	3-21/32"	5-3/32"	6-3/16"

316 Stainless Steel Dimensions

	Size	2"
A	overall length	3-3/16"
B	coupler length	2-3/16"
C	distance across ears	3-21/32"

EZLink® Armless Type D Couplers

Applications

- Transfer and/or unloading of fuels (gasoline or diesel) from tank truck to storage tanks
- Transfer of liquids compatible with the available coupling and gasket materials

Features

- Automatic couplers push-to-connect, providing a reliable connection
- Low profile allows easy connection and disconnection in tight applications
- Coupler push tabs can be locked with safety pins and/or zip tie
- Compatible with standard cam & groove adapters
- Lifetime warranty on stainless steel tabs

Materials

- Couplings and dust caps: 356T6 aluminum, 316 stainless steel
- Coupler tabs and springs: 316 stainless steel
- Gasket: nitrile rubber

Specification

- Gasket temperature range: **5°F** to **180°F (-15°C** to **82°C)**

Only use EZLink gaskets and tabs for this coupling system. Traditional cam & groove handles and gaskets, or other types of seals, are not compatible and will fail.

Size	356T6 Aluminum Part #	316 Stainless Steel Part #
1-1/2"	EZL150-D-AL	EZL150-D-SS
2"	EZL200-D-AL	EZL200-D-SS
3"	EZL300-D-AL	EZL300-D-SS
4"	EZL400-D-AL	---

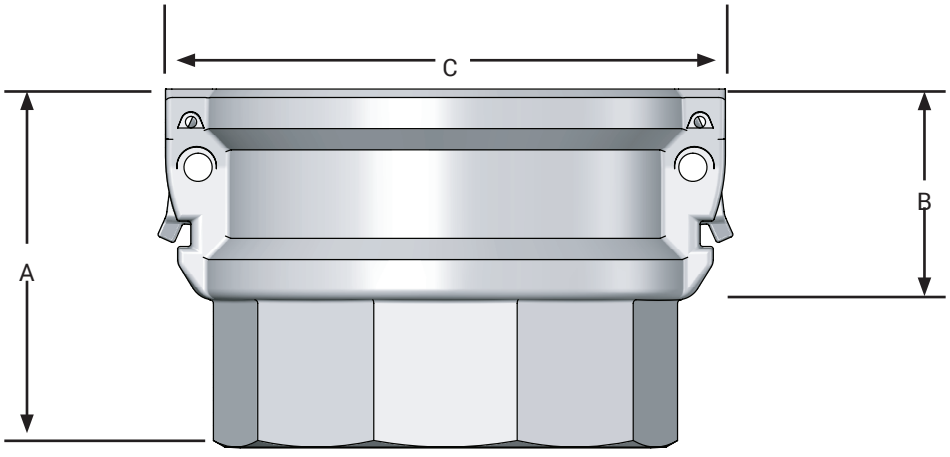

356T6 Aluminum Dimensions

	Size	1-1/2"	2"	3"	4"
A	overall length	3-3/32"	5-9/16"	6-1/2"	6-9/16"
B	coupler length	2-1/16"	2-3/16"	2-5/16"	2-5/16"
C	distance across ears	3-9/32"	3-21/32"	5-3/32"	6-3/16"
D	distance across flats	2-3/16"	2-1/16"	3-3/32"	4-3/32"

316 Stainless Steel Dimensions

	Size	1-1/2"	2"	3"
A	overall length	3-3/32"	5-9/16"	3-7/8"
B	coupler length	2-1/16"	2-3/16"	2-5/16"
C	distance across ears	3-9/32"	3-21/32"	5-3/32"
D	distance across flats	2-3/16"	2-1/16"	3-7/8"

EZLink® Armless Type DC Dust Caps

Applications
- Transfer and/or unloading of fuels (gasoline or diesel) from tank truck to storage tanks
- Transfer of liquids compatible with the available coupling and gasket materials

Features
- Automatic couplers push-to-connect, providing a reliable connection
- Low profile allows easy connection and disconnection in tight applications
- Coupler push tabs can be locked with safety pins and/or zip tie
- Compatible with standard cam & groove adapters
- Lifetime warranty on stainless steel tabs

Materials
- Couplings and dust caps: 356T6 aluminum, 316 stainless steel
- Coupler tabs and springs: 316 stainless steel
- Gasket: nitrile rubber

Specification
- Gasket temperature range: **5°F** to **180°F (-15°C** to **82°C)**

Only use EZLink gaskets and tabs for this coupling system. Traditional cam & groove handles and gaskets, or other types of seals, are not compatible and will fail.

Size	356T6 Aluminum Part #	316 Stainless Steel Part #
1-1/2"	EZL150-DC-AL	EZL150-DC-SS
2"	EZL200-DC-AL	EZL200-DC-SS
3"	EZL300-DC-AL	EZL300-DC-SS
4"	EZL400-DC-AL	---

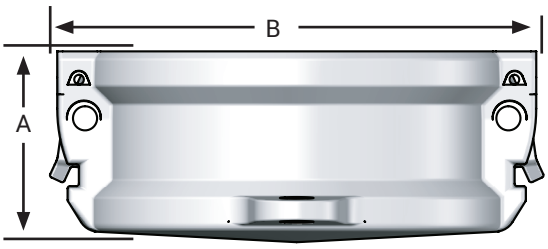

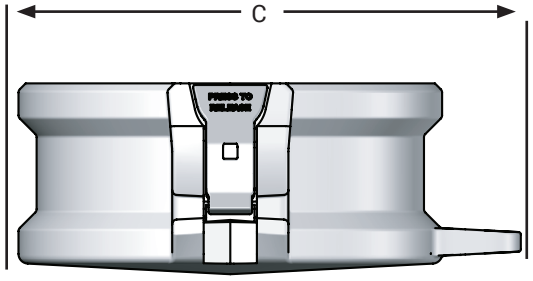

356T6 Aluminum Dimensions

	Size	2"	3"	4"
A	overall length	2-3/16"	2-5/16"	2-5/16"
B	distance across ears	3-21/32"	5-3/32"	6-3/16"
C	coupler O.D. with chain lug	3-5/8"	5-1/8"	6-15/32"

316 Stainless Steel Dimensions

	Size	2"
A	overall length	2-3/16"
B	distance across ears	3-21/32"
C	coupler O.D. with chain lug	3-19/32"

EZLink® Armless Cam & Groove

Replacement Kits

Feature

- Kit contains: 2 pins, 2 springs, and 2 tabs

Size	Part #
1-1/2" and 2"	EZL200RPLKIT
3" and 4"	EZL300RPLKIT

Replacement Gaskets

Size	Nitrile Rubber Part #	Fluorosilicone Part #	FKM-A Part #
1-1/2"	EZL150-G-BU	EZL150-G-FV	EZL150-G-VI
2"	EZL200-G-BU	EZL200-G-FV	EZL200-G-VI
3"	EZL300-G-BU	EZL300-G-FV	EZL300-G-VI
4"	EZL400-G-BU	EZL400-G-FV	EZL400-G-VI

Safety Clip

Plated Carbon Steel Part #
EZLCL400

Bottle Opener

Brass Part #
CAMOPENER

Vent-Lock® Safety Cam & Groove Couplings

Application
- Transfer of fluids and solids, with a safer disconnection

Features
- Safety release cam & groove couplings permit the release of static pressure when disconnecting hose assemblies
- Venting system protects operator from being sprayed with hazardous or non-hazardous fluids or solids
- Does not interchange with standard cam & groove products; use only with Dixon L-style fittings
- Consult Dixon for availability of other materials.

Specifications
- Rated to **250 PSI**; recommendation based on the use of mating Dixon® L-style fittings at ambient temperature **70°F (21°C)** with standard nitrile rubber seal installed. For use at elevated temperatures or other unusual operating conditions, consult Dixon
  - 1", 1-1/2", and 2" sizes have a maximum working pressure of **250 PSI**
  - 3" maximum working pressure **150 PSI** with King Crimp® ferrules, crimp sleeves, and bands at **125 PSI**
  - 4" maximum working pressure **150 PSI** with King Crimp ferrules, crimp sleeves, and bands at **100 PSI**

Type A Adapters
Adapter x Female NPT

Size	316 Stainless Steel Part #	Aluminum Part #
1"	L100-A-SS	---
1-1/2"	L150-A-SS	---
2"	L200-A-SS	---
3"	L300-A-SS	---
4"	---	L400-A-AL

Vent-Lock® Type A Adapters Dimensions

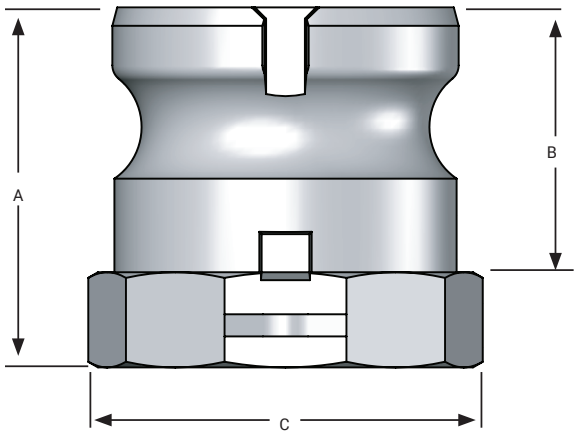

316 Stainless Steel Dimensions

	Size	1"	1-1/2"	2"	3"
A	overall length	1-29/32"	2-9/32"	2-17/32"	2-29/32"
B	adapter length	1-5/16"	1-5/8"	1-7/8"	2"
C	distance across flats	1-1/2"	2-9/32"	2-11/16"	3-3/4"

Vent-Lock® Type C Couplers

Coupler X Hose Shank

Application

- Transfer of fluids and solids, with a safer disconnection

Features

- Safety release cam & groove couplings permit the release of static pressure when disconnecting hose assemblies
- Venting system protects operator from being sprayed with hazardous or non-hazardous fluids or solids
- Does not interchange with standard cam & groove products; use only with Dixon® L-style fittings
- Safety orange cam arms
- Consult Dixon for availability of other materials

Specifications

- Rated to **250 PSI**; recommendation based on the use of mating Dixon L-style fittings at ambient temperature **70°F (21°C)** with standard nitrile rubber seal installed. For use at elevated temperatures or other unusual operating conditions, consult Dixon
  - 1", 1-1/2" and 2" sizes have a maximum working pressure of **250 PSI**
  - 3" maximum working pressure **150 PSI** with King Crimp® ferrules, crimp sleeves, and bands at **125 PSI**
  - 4" maximum working pressure **150 PSI** with King Crimp ferrules, crimp sleeves, and bands at **100 PSI**

Attachment Options

- Ferrules, sleeves, bands, and other reliable options

Size	316 Stainless Steel Part #
1"	L100-C-SS
1-1/2"	L150-C-SS
2"	L200-C-SS

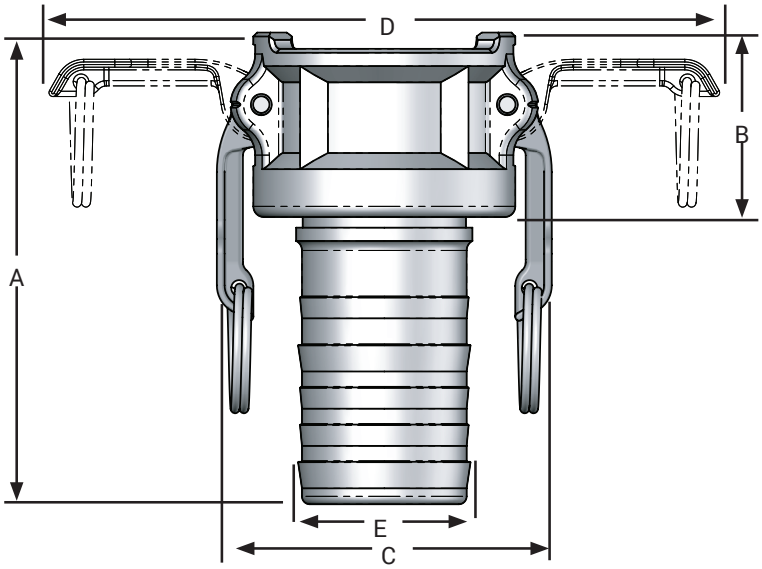

316 Stainless Steel Dimensions

	Size	1"	1-1/2"	2"
A	overall length	4-17/32"	4-13/16"	5-17/32"
B	coupler length	1-19/32"	1-29/32"	2-5/32"
C	distance across closed cam arms	2-7/16"	3-9/16"	3-15/16"
D	distance across open cam arms	5-3/16"	7-7/16"	7-13/16"
E	hose shank O.D.	1-1/16"	1-9/16"	2-1/16"

Vent-Lock® Safety EZ Boss-Lock™ Type C Couplers

Coupler X Hose Shank

Application

- Transfer of fluids and solids, with a safer disconnection

Features

- Safety release cam & groove couplings permit the release of static pressure when disconnecting hose assemblies
- Venting system protects operator from being sprayed with hazardous or non-hazardous fluids or solids
- Does not interchange with standard cam & groove products; use only with Dixon L-style fittings
- Safety orange cam arms
- Consult Dixon for availability of other materials

Specifications

- Rated to **250 PSI**; recommendation based on the use of mating Dixon® L-style fittings at ambient temperature **70°F (21°C)** with standard nitrile rubber seal installed. For use at elevated temperatures or other unusual operating conditions, consult Dixon
  - 1", 1-1/2" and 2" sizes have a maximum working pressure of **250 PSI**
  - 3" maximum working pressure **150 PSI** with King Crimp® ferrules, crimp sleeves, and bands at **125 PSI**
  - 4" maximum working pressure **150 PSI** with King Crimp ferrules, crimp sleeves, and bands at **100 PSI**

Attachment Options

- Ferrules, sleeves, bands, and other reliable options

Size	316 Stainless Steel Part #	Aluminum Part #
1"	RLC100EZ	---
1-1/2"	RLC150EZ	---
2"	RLC200EZ [1]	---
3"	RLC300EZ [1]	---
4"	---	ALC400EZ [1]

[1] Has drop shank

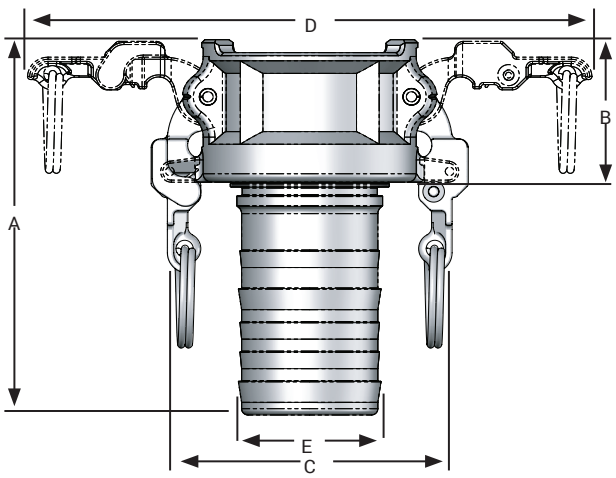

316 Stainless Steel Dimensions

	Size	1"	1-1/2"	2"	3"
A	overall length	4-15/32"	5"	5-9/16"	6-9/16"
B	coupler length	1-17/32"	2-3/32"	2-1/8"	2-1/4"
C	distance across closed cam arms	3-7/32"	4-7/32"	4-19/32"	5-27/32"
D	distance across open cam arms	6-11/32"	7-25/32"	8-5/32"	9-29-32"
E	hose shank O.D.	1-1/16"	1-9/16"	2-1/16"	3-3/32"

Vent-Lock™ EZ Boss-Lock™ Type D Couplers

Coupler x Female NPT

Application
- Transfer of fluids and solids, with a safer disconnection

Features
- Safety release cam & groove couplings permit the release of static pressure when disconnecting hose assemblies
- Venting system protects operator from being sprayed with hazardous or non-hazardous fluids or solids
- Does not interchange with standard cam & groove products; use only with Dixon L-style fittings
- Safety orange cam arms
- Consult Dixon for availability of other materials

Size	316 Stainless Steel Part #
1"	RLD100EZ
1-1/2"	RLD150EZ
2"	RLD200EZ
3"	RLD300EZ

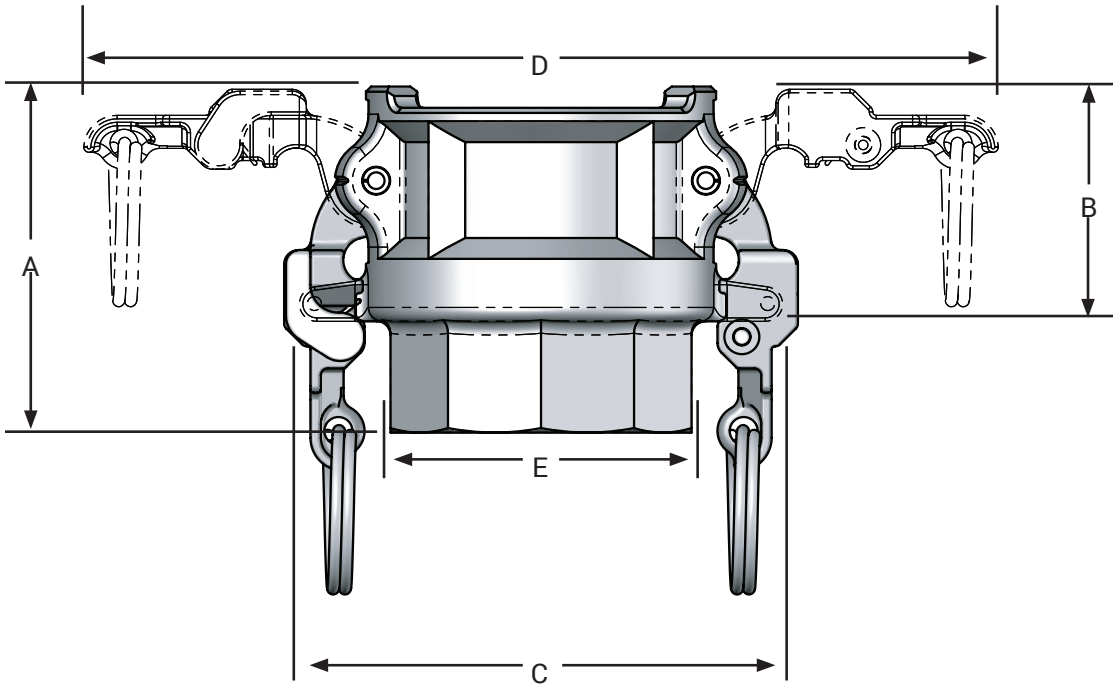

316 Stainless Steel Dimensions

	Size	2"
A	overall length	3-1/8"
B	coupler length	2-1/8"
C	distance across closed cam arms	4-19/32"
D	distance across open cam arms	8-5/32"
E	distance across flats	2-11/16"

Vent-Lock® Type E Adapters

Adapter x Hose Shank

Application
- Transfer of fluids and solids, with a safer disconnection

Features
- Safety release cam & groove couplings permit the release of static pressure when disconnecting hose assemblies
- Venting system protects operator from being sprayed with hazardous or non-hazardous fluids or solids
- Does not interchange with standard cam & groove products; use only with Dixon L-style fittings
- Consult Dixon for availability of other materials

Specifications
- Rated to **250 PSI**; recommendation based on the use of mating Dixon® L-style fittings at ambient temperature **70°F (21°C)** with standard nitrile rubber seal installed. For use at elevated temperatures or other unusual operating conditions, consult Dixon
  - 1", 1-1/2" and 2" sizes have a maximum working pressure of **250 PSI**
  - 3" maximum working pressure **150 PSI** with King Crimp® ferrules, crimp sleeves, and bands at **125 PSI**
  - 4" maximum working pressure **150 PSI** with King Crimp ferrules, crimp sleeves, and bands at **100 PSI**

Attachment Options
- Ferrules, sleeves, bands, and other reliable options

Size	316 Stainless Steel Part #
1"	L100-E-SS
1-1/2"	L150-E-SS
2"	L200-E-SS
3"	L300-E-SS

Vent-Lock Type E Adapters Dimensions

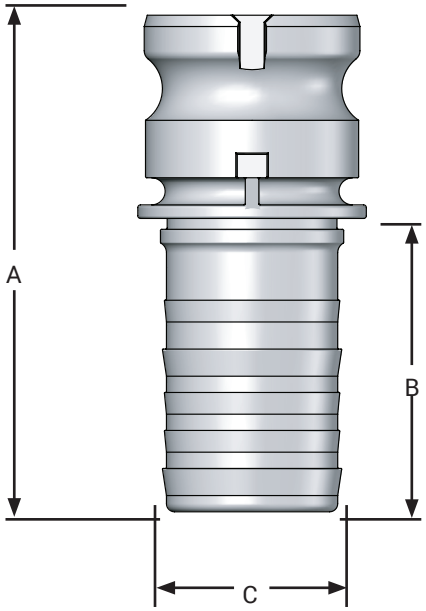

316 Stainless Steel Dimensions

	Size	1"	1-1/2"	2"	3"
A	overall length	4-11/16"	4-31/32"	5-23/32"	6-3/4"
B	hose shank length	2-15/16"	2-29/32"	3-3/8"	4-3/16"
C	hose shank O.D.	1-1/16"	1-9/16"	2-1/16"	3-3/32"

Vent-Lock® Safety Cam & Groove Type DC Dust Caps

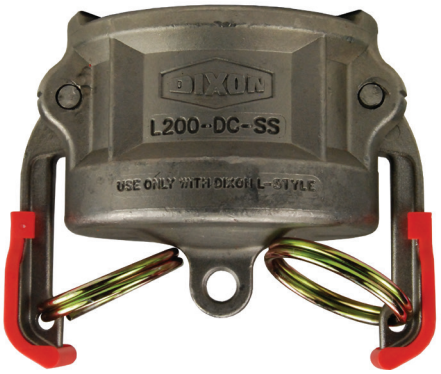

Application
- Transfer of fluids and solids, with a safer disconnection

Features
- Safety release cam & groove couplings permit the release of static pressure when disconnecting hose assemblies
- Venting system protects operator from being sprayed with hazardous or non-hazardous fluids or solids
- Does not interchange with standard cam & groove products; use only with Dixon L-style fittings
- Safety orange cam arms
- Consult Dixon® for availability of other materials

Size	316 Stainless Steel Part #
1"	L100-DC-SS
1-1/2"	L150-DC-SS
2"	L200-DC-SS

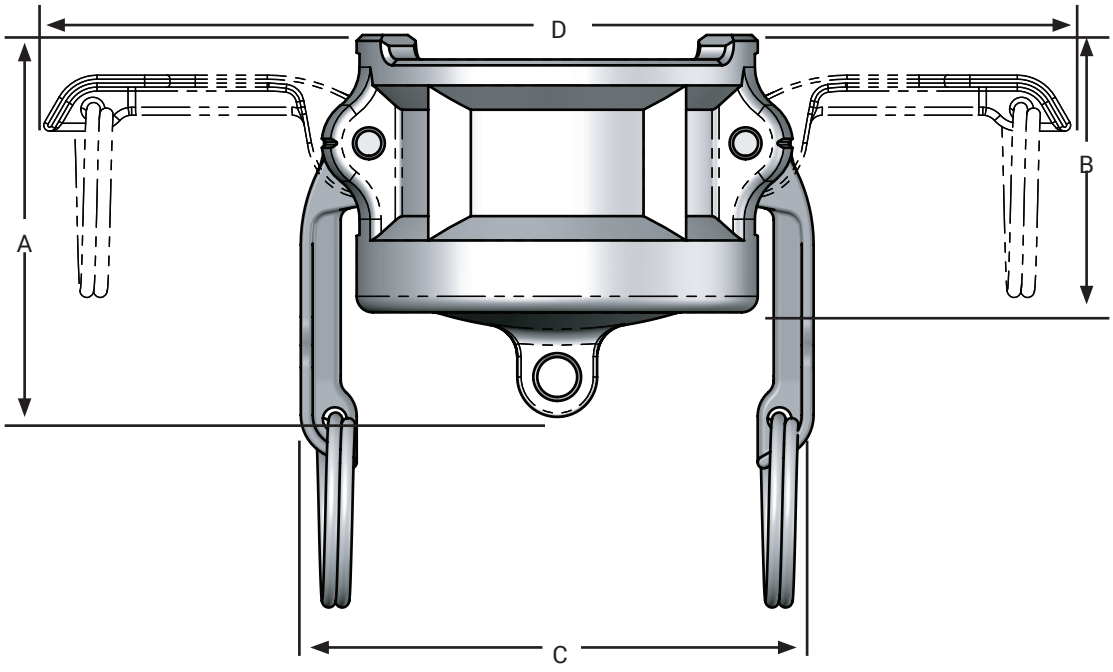

316 Stainless Steel Dimensions

	Size	2"	3"	4"
A	overall length	2-5/32"	2-3/4"	2-31/32"
B	coupler length	1-19/32"	1-29/32"	2-5/32"
C	distance across closed cam arms	2-7/16"	3-9/16"	3-15/16"
D	distance across open cam arms	5-3/16"	7-7/16"	7-13/16"

Vent-Lock® Safety Cam & Groove EZ Boss-Lock Type H Dust Caps

Application
- Transfer of fluids and solids, with a safer disconnection

Features
- Safety release cam & groove couplings permit the release of static pressure when disconnecting hose assemblies
- Venting system protects operator from being sprayed with hazardous or non-hazardous fluids or solids
- Does not interchange with standard cam & groove products; use only with Dixon L-style fittings
- Safety orange cam arms
- Consult Dixon® for availability of other materials

Size	316 Stainless Steel Part #	Aluminum Part #
1"	RLH100EZ	---
1-1/2"	RLH150EZ	---
2"	RLH200EZ	---
3"	RLH300EZ	---
3"	---	ALH400EZ

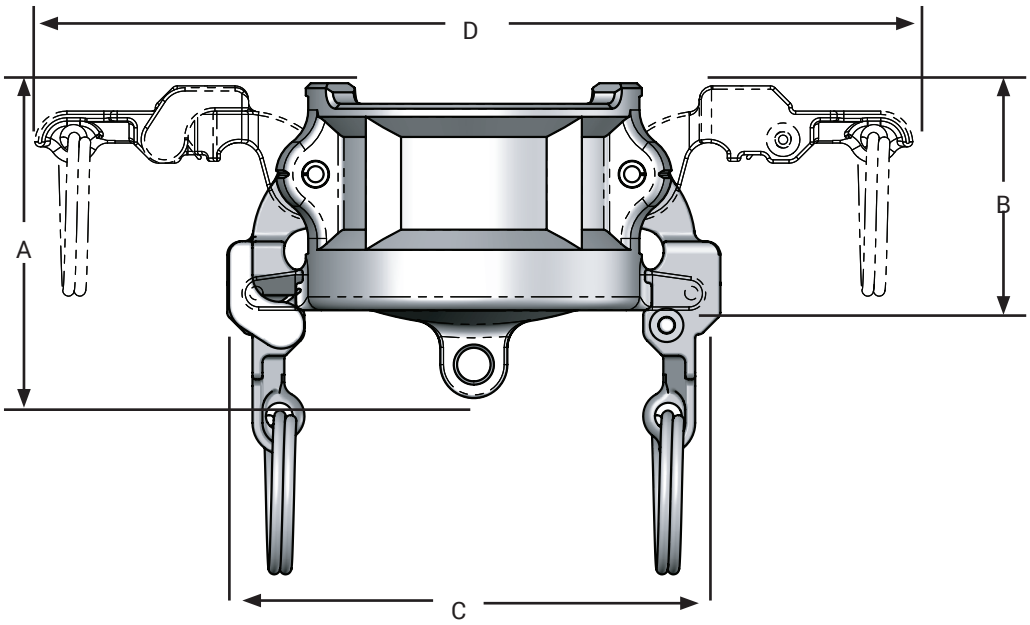

316 Stainless Steel Dimensions

	Size	1"	1-1/2"	2"	3"
A	overall length	2-5/32"	2-29/32"	2-15/16"	3-1/8"
B	coupler length	1-17/32"	2-3/32"	2-1/8"	2-1/4"
C	distance across closed cam arms	3-1/4"	4-7/32"	4-19/32"	5-27/32"
D	distance across open cam arms	6-11/32"	7-25/32"	8-5/32"	9-29/32"

Vent-Lock® Safety Cam & Groove Couplings Accessories

Dixon® handle assembly

Features
- Use only with Dixon Vent-Lock couplers
- Includes handle, ring, and pin

Size	316 Stainless Steel Part #
1"	L100-HSCRP-SI
1-1/2" - 2"	L200-HSCRP-SI

EZ Boss-Lock handle assembly

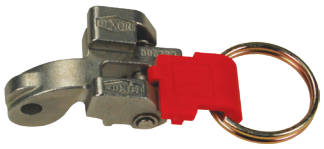

Features
- Use only with EZ Boss-Lock Vent-Lock couplers
- Includes handle, ring, and pin

Size	316 Stainless Steel Part #
1"	LRHEZ175
1-1/2" - 2"	LRHEZ152
3"	LRHEZ34

Vent-Lock® Safety Type DP Dust Plugs

Application
- Transfer of fluids and solids, with a safer disconnection

Size	316 Stainless Steel Part #
1"	L100-DP-SS
1-1/2"	L150-DP-SS
2"	L200-DP-SS
3"	L300-DP-SS

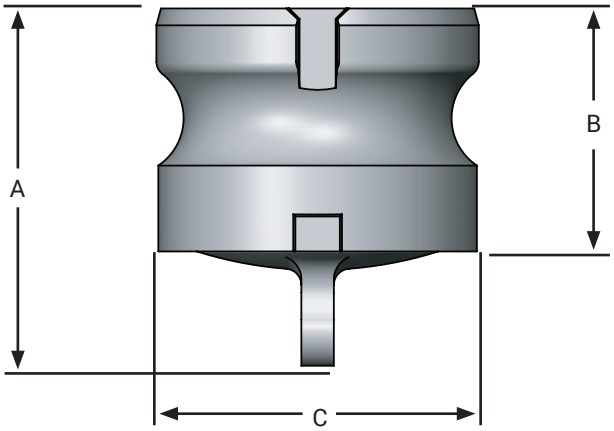

316 Stainless Steel Dimensions

	Size	1"	1-1/2"	2"	3"
A	overall length	1-15/16"	2-1/2"	2-3/4"	2-7/8"
B	adapter length	1-5/16"	1-5/8"	1-7/8"	2"
C	outside O.D.	1-7/16"	2-3/32"	2-15/32"	3-19/32"

Type A Adapters

Adapter x Female NPT

Feature
- Pressure rating is based on the seal of the mating part, see ratings on page 3

Size	356T6 Aluminum Part #	Aluminum Hard Coat Part #	Brass Part #
1/2"	50-A-AL[2]	---	50-A-BR
3/4" x 1/2"	7550-A-AL[2]	---	7550-A-BR
3/4"	75-A-AL[2]	---	75-A-BR
1"	100-A-AL[2]	---	100-A-BR
1-1/4"	125-A-AL	---	125-A-BR
1-1/2"	150-A-AL	150-A-ALH	150-A-BR
2"	200-A-AL	200-A-ALH	200-A-BR
2-1/2"	250-A-AL	---	250-A-BR
3"	300-A-AL	300-A-ALH	300-A-BR
4"	400-A-AL	400-A-ALH	400-A-BR
5"	500-A-AL	---	500-A-BR
6"	600-A-AL	600-A-ALH	600-A-BR
8" DIX	800-A-AL[1]	---	---
8" BL	801-A-AL[1]	---	---

[1] Dixon and Boss-Lock cam & groove couplings *do not interchange in the 8" size*
[2] Made from 6061-T6 aluminum

356T6 aluminum

aluminum hard coat

brass

Size	Unplated Malleable Iron Part #	Plated Malleable Iron Part #	316 Stainless Steel Part #
1/2"	---	---	50-A-SS
3/4" x 1/2"	---	---	7550-A-SS
3/4"	---	75-A-PM[2]	75-A-SS
1"	---	100-A-PM[2]	100-A-SS
1-1/4"	---	---	125-A-SS
1-1/2"	150-A-MI	150-A-PM	150-A-SS
2"	200-A-MI	200-A-PM	200-A-SS
2-1/2"	---	---	250-A-SS
3"	300-A-MI	300-A-PM	300-A-SS
4"	400-A-MI	400-A-PM	400-A-SS
5"	500-A-MI	---	500-A-SS
6"	---	600-A-PM [1]	600-A-SS

[1] Ductile iron
[2] Zinc plated carbon steel

unplated malleable iron

plated malleable iron

316 stainless steel

Adapter x Female NPT with Abrasion Resistant Inserts

Features
- Used in extreme abrasion transfer applications such as sand transfer in hydraulic fracturing
- Replacement inserts are available on page 79

Description	UHMW Polyethylene Insert Part #
(400-A-AL) aluminum adapter x female NPT with UHMW insert	400-A-ALINSERT
(400-A-MI) malleable iron adapter x female NPT with UHMW insert	400-A-MIINSERT
(400-A-SS) stainless steel adapter x female NPT with UHMW insert	400-A-SSINSERT

400-A-ALINSERT

NOTE: See page 24 for dimensions

Type A Adapters Dimensions

Adapter x Female NPT

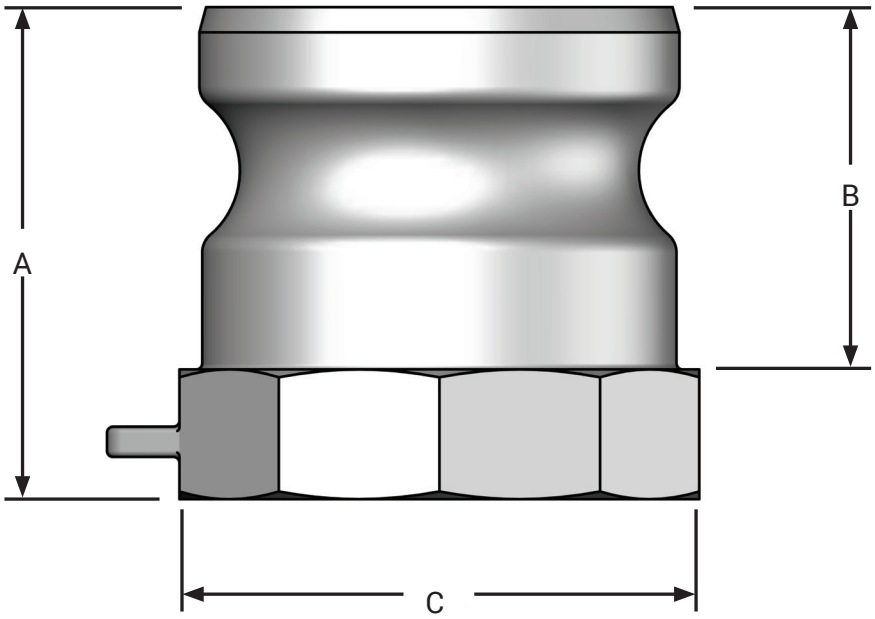

356T6 Aluminum, Brass, and Iron Dimensions

Size		1/2"	3/4" x 1/2"	3/4"	1"	1-1/4"	1-1/2"	2"	2-1/2"	3"	4"	5"	6"	8" DIX	8" BL
A	overall length	1-11/16"	1-21/32"	1-5/8"	1-31/32"	2-7/32"	2-3/16"	2-5/8"	2-11/16"	2-3/4"	3-1/8"	3-17/32"	3-7/16	4-13/16"	4-7/16"
B	adapter length	1-1/16"	1-1/16"	1-1/16"	1-3/8"	1-9/16"	1-5/8"	1-7/8"	1-15/16"	2"	2-1/16"	2-5/16"	2-1/4"	3-9/16"	2-1/4"
C	distance across flats	1"	1-3/8"	1-3/8"	1-1/2"	2"	2-9/32"	2-3/4"	3-7/32"	3-7/8"	5"	5-15/16"	7-11/16"	10-5/8"	10-5/8"

316 Stainless Steel Dimensions

Size		1/2"	3/4" x 1/2"	3/4"	1"	1-1/4"	1-1/2"	2"	2-1/2"	3"	4"	5"	6"	8" DIX	8" BL
A	overall length	1-11/16"	1-17/32"	1-1/2"	1-31/32"	2-1/8"	2-3/16"	2-19/32"	3-11/32"	2-29/32"	3-5/32"	3-1/4"	3-1/4"	---	---
B	adapter length	1-1/16"	1-1/16"	1"	1-5/16"	1-9/16"	1-5/8"	1-7/8"	1-15/16"	2"	2-1/16"	2-5/16"	2-1/4"	---	---
C	distance across flats	1"	1-5/16"	1-5/16"	1-1/2"	1-15/16"	2-9/32"	2-11/16"	3-3/8"	3-3/4"	5"	6-17/32"	7-3/4"	---	---

Dixon® Type B Couplers

Coupler x Male NPT

Features

- Couplers are supplied standard with a nitrile rubber gasket, other gasket types available on pages 75-77
- 1/2" Dixon coupler has only one cam arm
- Pull rings are not supplied on 1/2" - 1" Dixon couplings

Size	356T6 Aluminum Part #	Aluminum Hard Coat Part #	Brass Part #
1/2"	50-B-AL	---	50-B-BR
3/4"	75-B-AL	---	75-B-BR
1"	100-B-AL	---	100-B-BR
1-1/4"	125-B-AL	---	---
1-1/2"	150-B-AL	150-B-ALH	150-B-BR
2"	200-B-AL	200-B-ALH	200-B-BR
2-1/2"	250-B-AL	---	---
3"	300-B-AL	300-B-ALH	300-B-BR
4"	400-B-AL	400-B-ALH	400-B-BR
5"	500-B-AL	---	---
6"	600-B-AL	600-B-ALH	---
8"	800-B-AL[1, 2]	---	---

[1] Dixon and Boss-Lock cam & groove couplings do not interchange in the 8" size The 8" Dixon design has 4 cam arms

[2] Parts are produced as a welded fabrication.

Size	Unplated Malleable Iron Part #	316 Stainless Steel Part #
1/2"	---	50-B-SS
3/4"	---	75-B-SS
1"	---	100-B-SS
1-1/2"	150-B-MI[1]	150-B-SS
2"	200-B-MI	200-B-SS
2-1/2"	---	250-B-SS
3"	300-B-MI[1]	300-B-SS
4"	400-B-MI	400-B-SS
6"	---	600-B-SS

[1] Ductile iron

356T6 aluminum

aluminum hard coat

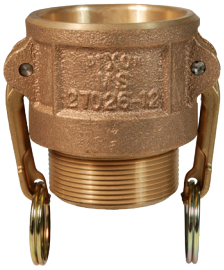

brass

unplated malleable iron

316 stainless steel

Dixon® Type B Coupler Dimensions

Coupler X Male NPT

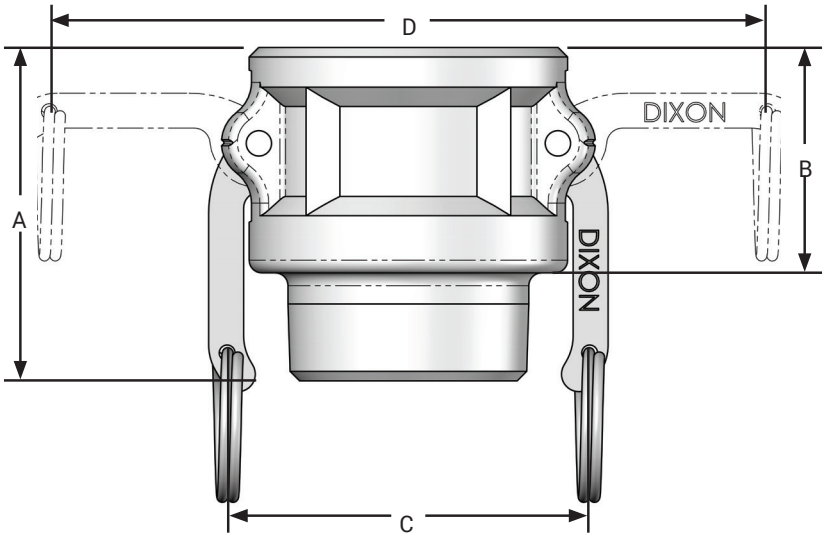

356T6 Aluminum, Brass, and Iron Dimensions

Size		1/2"	3/4"	1"	1-1/4"	1-1/2"	2"	2-1/2"	3"	4"	5"	6"	8"
A	overall length	1-31/32"	2-1/32"	2-17/32"	2-7/8"	2-27/32"	3-1/4"	3-5/8"	3-15/16"	4-1/32"	4-3/16"	4-7/16"	8-1/4"
B	coupler length	1-9/32"	1-9/32"	1-21/32"	1-31/32"	1-13/16"	2-7/32"	2-3/8"	2-5/16"	2-11/32"	2-5/16"	2-5/8"	3-13/16"
C	distance across closed cam arms	1-17/32"	2-1/8"	2-7/16"	3-1/4"	3-9/16"	3-15/16"	4-7/16"	5-15/32"	6-9/16"	7-9/16"	10-3/32"	12-1/32"
D	distance across open cam arms	2-5/8"	4-3/8"	5-3/16"	7-5/32"	7-7/16"	7-13/16"	8-11/32"	10-3/32"	11-3/16"	12-3/16"	16-1/4"	19-31/32"

316 Stainless Steel Dimensions

Size		1/2"	3/4"	1"	1-1/4"	1-1/2"	2"	2-1/2"	3"	4"	6"
A	overall length	2-1/32"	2-1/8"	2-9/16"	2-27/32"	2-31/32"	3-9/32"	3-7/16"	3-29/32"	4"	4-17/32"
B	coupler length	1-7/32"	1-1/4"	1-9/16"	1-29/32"	1-29/32"	2-7/32"	2-1/4"	2-9/32"	2-9/32"	2-19/32"
C	distance across closed cam arms	1-17/32"	2-1/8"	2-7/16"	3-1/4"	3-9/16"	3-15/16"	4-7/16"	5-15/32"	6-9/16"	10-3/32"
D	distance across open cam arms	2-5/8"	4-3/4"	5-3/16"	7-5/32"	7-7/16"	7-13/16"	8-11/32"	9-15/16"	11-1/32"	16-1/4"

Boss-Lock Type B Couplers

Coupler x Male NPT

Features

- Couplers are supplied standard with a nitrile rubber gasket, other gasket types available on pages 75-77
- All Boss-Lock couplers are supplied with pull-ring safety clips.

Size	356T6 Aluminum Part #	Brass Part #
3/4"	---	BB075
1"	AB100	BB100
1-1/4"	AB125	BB125
1-1/2"	AB150	BB150
2"	AB200	BB200
2-1/2"	AB250	BB250
3"	AB300	BB300
4"	AB400	BB400
6"	AB600	---

Size	Plated Malleable Iron Part #	316 Stainless Steel Part #
3/4" x 1/2"	---	RB050BL
3/4"	---	RB075BL
1"	IB100	RB100BL
1-1/4"	---	RB125BL
1-1/2"	---	RB150BL
2"	IB200	RB200BL
3"	---	RB300BL
4"	---	RB400BL

356T6 aluminum

brass

plated malleable iron

316 stainless steel

Boss-Lock Type B Coupler Dimensions

Coupler X Male NPT

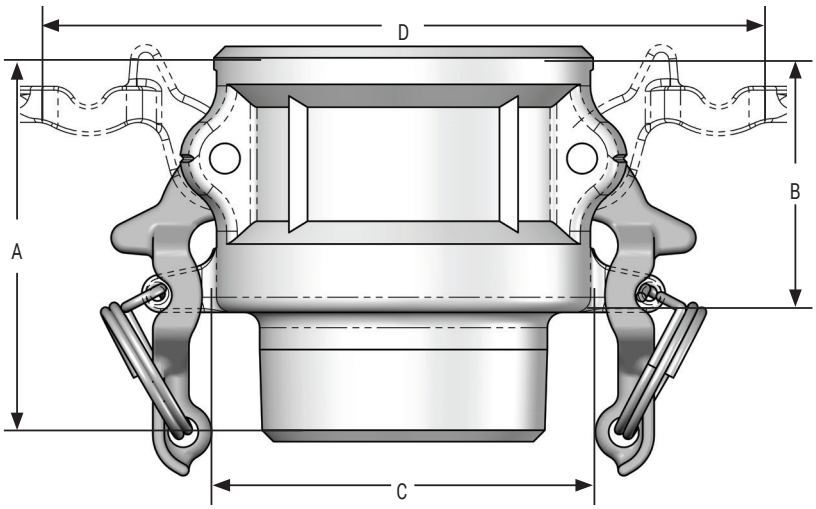

356T6 Aluminum, Brass, and Iron Dimensions

Size		3/4"	1"	1-1/4"	1-1/2"	2"	2-1/2"	3"	4"	6"
A	overall length	2-5/16"	2-17/32"	3-5/32"	3-5/32"	3-9/32"	3-7/8"	4"	4-1/16"	4-23/32"
B	coupler length	1-13/32"	1-17/32"	1-29/32"	1-29/32"	2-7/32"	2-1/4"	2-5/16"	2-5/16"	2-19/32"
C	distance across safety lugs	2-19/32"	2-29/32"	3-5/8"	3-29/32"	4-5/16"	4-13/16"	5-9/16"	6-11/16"	9-5/8"
D	distance across open cam arms	5-13/32"	5-9/16"	7-15/32"	7-25/32"	8-5/32"	8-21/32"	9-29/32"	11"	16-5/32"

316 Stainless Steel Dimensions

Size		3/4" x 1/2"	3/4"	1"	1-1/4"	1-1/2"	2"	3"	4"
A	overall length	2-1/4"	2-1/4"	2-9/16"	3-3/16"	3-7/32"	3-1/4"	3-29/32"	4-1/16"
B	coupler length	1-5/16"	1-9/32"	1-9/16"	1-29/32"	1-29/32"	2-3/16"	2-9/32"	2-5/16"
C	distance across safety lugs	2-25/32"	2-25/32"	2-29/32"	3-5/8"	3-29/32"	4-5/16"	5-9/16"	6-11/16"
D	distance across open cam arms	5-13/32"	5-13/32"	5-9/16"	7-15/32"	7-25/32"	8-5/32"	9-29/32"	11"

EZ Boss-Lock Type B Couplers

Coupler x Male NPT

356T6 aluminum

Feature

- Couplers are supplied standard with a nitrile rubber gasket, other gasket types are available on pages 75-77

Under no circumstances should the EZ Boss-Lock cam arms be used on any fitting not specifically designed for their use. See page 5 for further specifications.

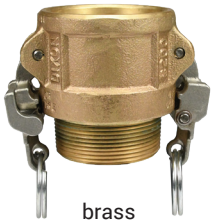

brass

316 stainless steel

Size	356T6 Aluminum Part #	Brass Part #	316 Stainless Steel Part #
3/4" x 1/2"	---	---	RB050EZ
3/4"	---	BB075EZ	RB075EZ
1"	AB100EZ	BB100EZ	RB100EZ
1-1/4"	---	BB125EZ	RB125EZ
1-1/2"	AB150EZ	BB150EZ	RB150EZ
2"	AB200EZ	BB200EZ	RB200EZ
3"	AB300EZ	BB300EZ	RB300EZ
4"	AB400EZ	BB400EZ	RB400EZ
6"	---	---	RB600EZ

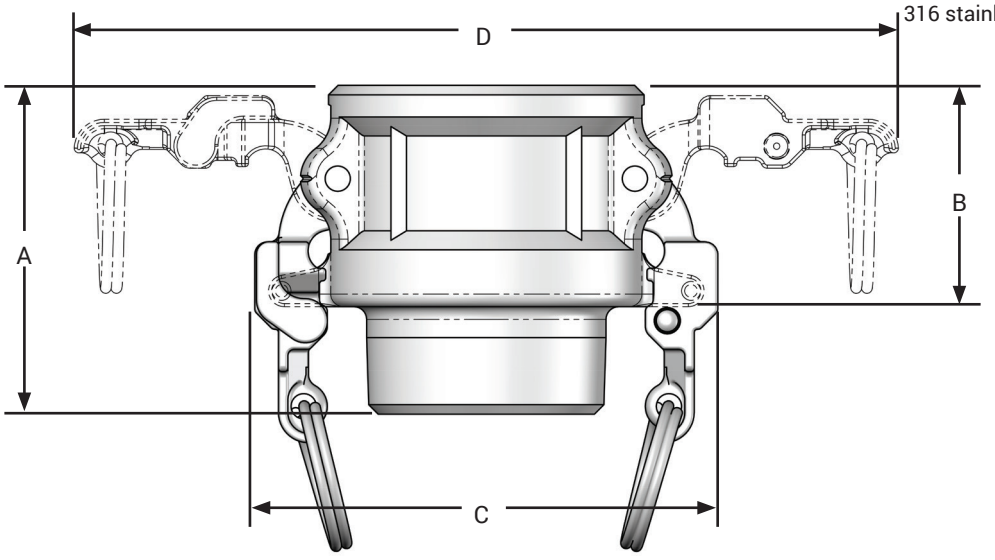

356T6 Aluminum, Brass, and Iron Dimensions

	Size	3/4"	1"	1-1/4"	1-1/2"	2"	3"	4"
A	overall length	2-5/16"	2-17/32"	3-5/32"	3-5/32"	3-9/32"	4"	4-1/16"
B	coupler length	1-13/32"	1-17/32"	1-29/32"	1-29/32"	2-7/32"	2-5/16"	2-5/16"
C	distance across closed cam arms	3-3/32"	3-7/32"	3-29/32"	4-7/32"	4-19/32"	5-27/32"	6-15/16"
D	distance across open cam arms	6-7/32"	6-11/32"	7-15/32"	7-25/32"	8-5/32"	9-29/32"	11"

316 Stainless Steel Dimensions

	Size	3/4" x 1/2"	3/4"	1"	1-1/4"	1-1/2"	2"	3"	4"	6"
A	overall length	2-1/4"	2-1/4"	2-9/16"	3-3/16"	3-7/32"	3-1/4"	3-29/32"	4-1/16"	4-17/32"
B	coupler length	1-5/16"	1-9/32"	1-9/16"	1-29/32"	1-29/32"	2-3/16"	2-9/32"	2-5/16"	2-19/32"
C	distance across closed cam arms	3-3/32"	3-3/32"	3-1/4"	3-29/32"	4-7/32"	4-19/32"	5-27/32"	6-15/16"	9-31/32"
D	distance across open cam arms	6-7/32"	6-7/32"	6-11/32"	7-15/32"	7-25/32"	8-5/32"	9-29/32"	11"	16-25/32"

Dixon® Type C Couplers

Coupler x Hose Shank

356T6 aluminum

aluminum hard coat

brass

unplated ductile iron

316 stainless steel

400-C-MIINSERT

Features

- Couplers are supplied standard with a nitrile rubber gasket, other gasket types are available on pages 74-77
- 1/2" Dixon coupler has only one cam arm
- Pull rings are not supplied on 1/2" - 1" Dixon couplings

Hose I.D.	356T6 Aluminum Part #	Aluminum Hard Coat Part #	Brass Part #
1/2"	50-C-AL	---	50-C-BR
3/4"	75-C-AL	---	75-C-BR
1"	100-C-AL	---	100-C-BR
1-1/4"	125-C-AL	---	125-C-BR
1-1/2"	150-C-AL	150-C-ALH	150-C-BR
2"	200-C-AL	200-C-ALH	200-C-BR
2-1/2"	250-C-AL	---	250-C-BR
3"	300-C-AL	300-C-ALH	300-C-BR
4"	400-C-AL	400-C-ALH	400-C-BR
5"	500-C-AL	---	---
6"	600-C-AL	600-C-ALH	600-C-BR
8"	800-C-AL[1]	---	---

Hose I.D.	Unplated Ductile Iron Part #	316 Stainless Steel Part #
1/2"	---	50-C-SS
3/4"	---	75-C-SS
1"	---	100-C-SS
1-1/4"	---	125-C-SS
1-1/2"	150-C-MI[3]	150-C-SS
2"	200-C-MI[2]	200-C-SS
2-1/2"	---	250-C-SS
3"	300-C-MI[2]	300-C-SS
4"	400-C-MI[2]	400-C-SS
5"	---	500-C-SS
6"	600-C-MI[2]	600-C-SS

[1] Dixon and Boss-Lock cam & groove couplings do not interchange in the 8" size the 8" Dixon design has 4 cam arms
[2] Suitable for use with King Crimp® sleeves and ferrules
[3] Malleable iron

Only use the crimp style shanks with the crimp style sleeves and ferrules.
Due to differences in dimensions and tolerances for safety reasons, do not interchange other manufacturers' products with Dixon products.

Coupler x Hose Shank with Abrasion Resistant Inserts

Features

- Used in extreme abrasion transfer applications such as sand transfer in hydraulic fracturing
- Replacement inserts are available on page 79

Description	UHMW Polyethylene Part #
(400-C-AL) aluminum coupler x hose shank with UHMW insert	400-C-ALINSERT
(400-C-MI) malleable iron coupler x hose shank with UHMW insert	400-C-MIINSERT

Dixon® Type C Couplers with Notched NOS Shank

Coupler x NOS Shank

Features

- System allows you to better manage your inventories, you can stock one stem and two ferrules, and cover the same hose range with less inventory, you must purchase a fitting and the matching ferrule to create an assembly
- For hose outside diameters of 2-4/64" and below, the couplings are crimp only
- For hose outside diameters of 2-5/64" and above, the couplings can be crimped or swaged
- For use with NOS ferrules on page 48

Size	316 Stainless Steel Part #
1-1/2"	150CNOSSS [1]
2"	200CNOSSS
3"	300CNOSSS

[1] Part will be discontinued as stock is depleted

NOTE: Only use the NOS shank with the NOS ferrules.
Due to differences in dimensions and tolerances for safety reasons, do not use other manufacturers' stems or ferrules with Dixon® products.

Dixon® Type C Couplers Dimensions

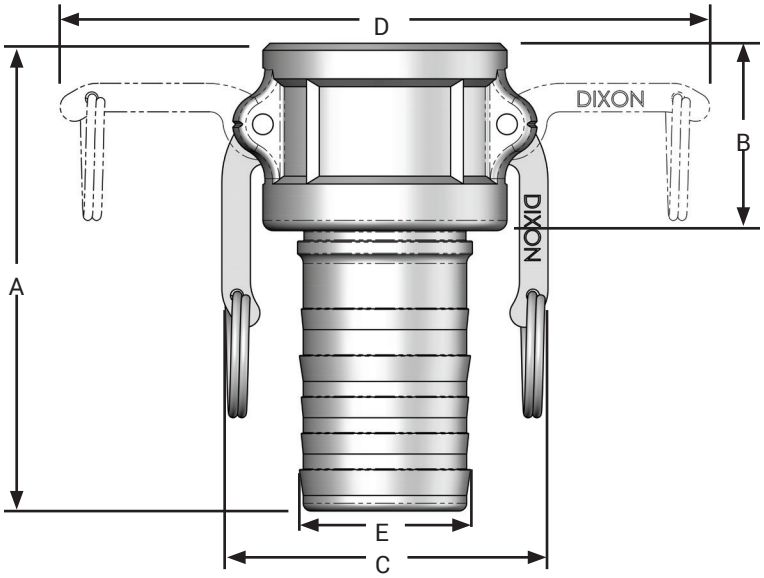

356T6 Aluminum, Brass, and Iron Dimensions

	Size	1/2"	3/4"	1"	1-1/4"	1-1/2"	2"	2-1/2"	3"	4"	5"	6"	8" BL
A	overall length	2-21/32"	3-3/4"	4-1/2"	4-3/4"	4-7/8"	5-19/32"	6"	6-17/32"	6-9/16"	6-9/16"	8-23/32"	11-13/16"
B	coupler length	1-7/32"	1-1/4"	1-9/16"	1-15/16"	1-31/32"	2-7/32"	2-1/4"	2-5/16"	2-5/16"	2-5/16"	2-11/16"	3-13/16"
C	distance across closed cam arms	1-17/32"	2-1/8"	2-7/16"	3-1/4"	3-9/16"	3-15/16"	4-7/16"	5-15/32"	6-9/16"	7-9/16"	10-3/32"	12-1/32"
D	distance across open cam arms	2-11/16"	4-3/8"	5-3/16"	7-5/32"	7-7/16"	7-13/16"	8-11/32"	10-3/32"	11-3/16"	12-3/16"	16-1/4"	19-31/32"
E	hose shank O.D.	19/32"	27/32"	1-1/16"	1-11/32"	1-9/16"	2-1/16"	2-5/8"	3-3/32"	4-3/32"	5-3/32"	6-1/16"	8-3/32"

316 Stainless Steel Dimensions

	Size	1/2"	3/4"	1"	1-1/4"	1-1/2"	2"	2-1/2"	3"	4"	5"	6"
A	overall length	3-7/32"	3-11/16"	4-1/2"	4-5/8"	4-13/16"	5-19/32"	6-1/16"	6-7/16"	6-17/32"	7-3/8"	8-11/16"
B	coupler length	1-7/32"	1-1/4"	1-9/16"	1-29/32"	1-29/32"	2-7/32"	2-1/4"	2-1/4"	2-9/32"	2-7/16"	2-19/32"
C	distance across closed cam arms	1-17/32"	2-1/8"	2-7/16"	3-1/4"	3-9/16"	3-15/16"	4-7/16"	5-15/32"	6-9/16"	7-9/16"	10-3/32"
D	distance across open cam arms	2-5/8"	4-3/8"	5-3/16"	7-5/32"	7-7/16"	7-13/16"	8-11/32"	9-15/16"	11-1/32"	12-3/16"	16-1/4"
E	hose shank O.D.	19/32"	27/32"	1-1/16"	1-11/32"	1-9/16"	2-1/16"	2-5/8"	3-3/32"	4-3/32"	5-3/32"	6-1/16"

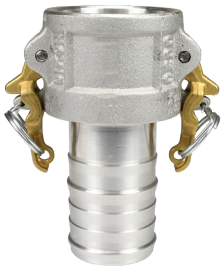

356T6 aluminum

brass

plated malleable iron

316 stainless steel

Boss-Lock Type C Couplers

Coupler x Hose Shank

Features

- Couplers are supplied standard with a nitrile rubber gasket, other gasket types are available on pages 75-77
- All Boss-Lock couplers are supplied with pull-ring safety clips

Size	356T6 Aluminum Part #	Brass Part #
3/4"	AC075	BC075
1"	AC100	BC100
1-1/4"	AC125	BC125
1-1/2"	AC150	BC150
2"	AC200	BC200
2-1/2"	AC250	BC250
3"	AC300	BC300
4"	AC400	BC400
6"	AC600	BC600
8"	AC800[1]	---

Size	Plated Malleable Iron Part #	316 Stainless Steel Part #
3/4" x 1/2"	---	RC050BL
3/4"	IC075	RC075BL
1"	IC100	RC100BL
1-1/4"	---	RC125BL
1-1/2"	IC150	RC150BLNO
2"	IC200	RC200BLNO
3"	IC300	RC300BL
4"	IC400[2]	RC400BLNO
6"	---	---

[1] Dixon and Boss-Lock cam & groove couplings do not interchange in the 8" size
[2] Ductile iron

EZ Boss-Lock Type C Couplers with Collared Hose Shank

Coupler x Collared Hose Shank

Features

- Utilization of Boss clamp provides greater resistance to end pull than conventional band clamps
- Can be used with band clamps

Size	316 Stainless Steel Part #
1"	RC100CEZ
1-1/2"	RC150CEZ
2"	RC200CEZ

Boss-Lock Type C Couplers with Notched Shank

Coupler x Hose Shank

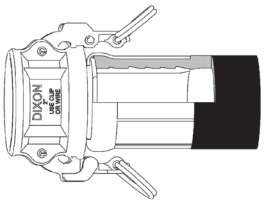

crimped assembly

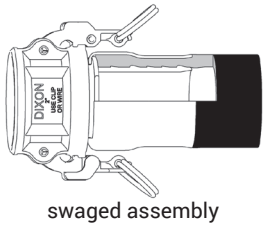

swaged assembly

Features

- Coupling can be removed from a damaged hose by cutting away the ferrule, without necessarily damaging the fitting, after inspection of the fitting to determine its suitability for reuse, it can be reinstalled into another hose by using a new ferrule
- System allows you to better manage your inventories, you can stock one coupling and two ferrules, and cover the same hose range with less inventory, you must purchase a fitting and the matching ferrule to create an assembly
- For use with NO ferrules on page 47

Dixon® stems and ferrules are specifically designed to be used together as a coupling system. Due to differences in dimensions and tolerances for safety reasons, do not use other manufacturers' stems or ferrules with Dixon products.

Size	316 Stainless Steel Part #
1-1/2"	RC150BLNO
2"	RC200BLNO
3"	RC300BLNO
4"	RC400BLNO

NOTE: Contact Dixon for swage and crimp recommendations.

Boss-Lock Type C Coupler Dimensions

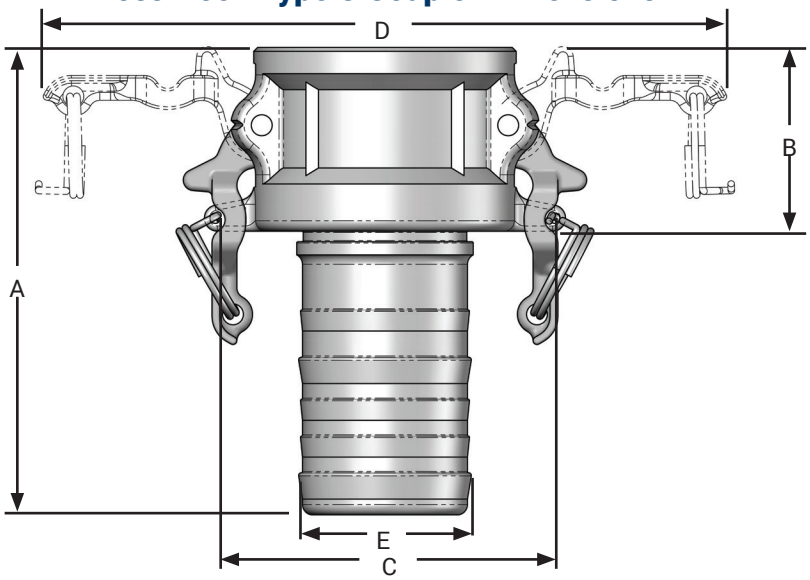

356T6 Aluminum, Brass and Iron Dimensions

	Size	3/4"	1"	1-1/4"	1-1/2"	2"	2-1/2"	3"	4"	6"	8"
A	overall length	4-3/8"	4-7/8"	5-7/16"	4-29/32"	5-19/32"	6-1/16"	6-3/16"	6-1/2"	8-3/8"	11-13/16"
B	coupler length	1-13/32"	1-17/32"	1-29/32"	1-31/32"	2-7/32"	2-1/4"	2-1/4"	2-1/4"	2-5/8"	2-13/16"
C	distance across closed cam arms	2-19/32"	2-29/32"	3-5/8"	3-29/32"	4-5/16"	4-13/16"	5-9/16"	6-11/16"	9-5/8"	11-5/8"
D	distance across open cam arms	5-13/32"	5-9/16"	7-15/32"	7-25/32"	8-5/32"	8-21/32"	9-29/32"	11"	16-5/32"	18-5/32"
E	hose shank O.D.	27/32"	1-1/16"	1-11/32"	1-9/16"	2-1/16"	2-19/32"	3-3/32"	4-3/32"	6-3/32"	8-1/16"

316 Stainless Steel Dimensions

	Size	3/4" x 1/2"	3/4"	1"	1-1/4"	1-1/2"	2"	3"	4"
A	overall length	3-3/32"	3-7/8"	4-1/2"	4-31/32"	5-1/2"	5-5/16"	6-9/32"	7"
B	coupler length	1-5/16"	1-9/32"	1-9/16"	2-1/32"	1-29/32"	2-3/16"	2-9/32"	2-5/16"
C	distance across closed cam arms	2-25/32"	2-25/32"	2-29/32"	3-5/8"	3-29/32"	4-5/16"	5-9/16"	6-11/16"
D	distance across open cam arms	5-13/32"	5-13/32"	5-9/16"	7-15/32"	7-25/32"	8-5/32"	9-29/32"	11"
E	hose shank O.D.	19/32"	27/32"	1-1/16"	1-5/16"	1-19/32"	2-3/32"	3-3/32"	4-3/32"

EZ Boss-Lock Type C Couplers

Coupler X Hose Shank

356T6 aluminum

brass

316 stainless steel

AC400EZP[1]

Feature

- Couplers are supplied standard with a nitrile rubber gasket, other gasket types are available on pages 75-77
- Under no circumstances should the EZ Boss-Lock cam arms be used on any fitting not specifically designed for their use.

Size	356T6 Aluminum Part #	Brass Part #	316 Stainless Steel Part #
3/4" x 1/2"	---	---	RC050EZ
3/4"	AC075EZ	BC075EZ	RC075EZ
1"	AC100EZ	BC100EZ	RC100EZCR
1-1/4"	---	BC125EZ	RC125EZCR
1-1/2"	AC150EZ	BC150EZ	RC150EZNO
2"	AC200EZ	BC200EZ	RC200EZNO
2-1/2"	AC250EZ	---	---
3"	AC300EZ	BC300EZ	RC300EZCR
4"	AC400EZ	BC400EZ	RC400EZCR
	AC400EZP[1]	---	---
6"	AC600EZ	---	RC600EZCR
8"	AC800EZ[2]	---	---

[1] Includes paddle handle
[2] Dixon® and Boss-Lock cam & groove couplings do not interchange in the 8" size.
NOTE: See page 5 for further specifications.

EZ Boss-Lock Type C Couplers with Phono Finish Shank

Application

- The shank design on these fittings was developed specifically for chemical transport hoses having Crosslinked Polyethylene (XLPE) or Ultra High Molecular Weight Polyethylene (UHMW) tubes, where shank retention can be a problem when using conventional band clamps.

Features

- In testing tank transport hoses from a wide variety of manufacturers, the Boss-Lock PF fitting showed significant improvement in hose coupling retention over the conventional cam & groove shank design
- For best results we recommend the use of 3/4" wide band clamps.
- Other sizes available; consult Dixon for pricing and availability

Size	316 Stainless Steel Part #
2"	RC200EZPF
3"	RC300EZPF

EZ Boss-Lock Type C Couplers with Swaged Ferrule

Application

- Developed specifically for chemical transport hoses having Crosslinked Polyethylene (XLPE) or Ultra High Molecular Weight Polyethylene (UHMW) tubes, swaged Boss-Lock provides you with a permanently attached cam & groove fitting when superior coupling retention is required

Features

- In testing tank transport hoses from a wide variety of manufacturers, the swaged Boss-Lock fitting proved itself to be the clear winner in overall performance
- Available on special order, other sizes or hose O.D.s, consult Dixon® for pricing and availability
- Special equipment required for installation, consult Dixon for pricing and availability

Size	Hose O.D.		316 Stainless Steel Part #
	from	to	
3/4"	1-6/64"	1-22/64"	RC075EZ-70
1"	1-29/64"	1-35/64"	RC100EZ-20
1"	1-36/64"	1-44/64"	RC100EZ-70

EZ Boss-Lock Type C Couplers with Notched Hose Shank

Coupler x Hose Shank

Features

- Coupling can be removed from a damaged hose by cutting away the ferrule, without necessarily damaging the fitting, after inspection of the fitting to determine its suitability for reuse, it can be reinstalled into another hose by using a new ferrule.
- System allows you to better manage your inventories, you can stock one coupling and two ferrules, and cover the same hose range with less inventory, you must purchase a fitting and the matching ferrule to create an assembly.
- For use with notched ferrules on page 47

Size	316 Stainless Steel Part #
1-1/2"	RC150EZNO
2"	RC200EZNO
3"	RC300EZNO
4"	RC400EZNO

Dixon stems and ferrules are specifically designed to be used together as a coupling system. Due to differences in dimensions and tolerances for safety reasons, do not use other manufacturers' stems or ferrules with Dixon products.

EZ Boss-Lock Type C Coupler Dimensions

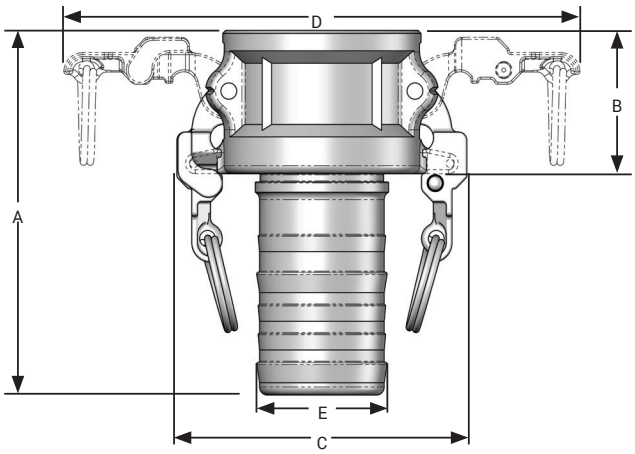

356T6 Aluminum, Brass, and Iron Dimensions

	Size	3/4" x 1/2"	3/4"	1"	1-1/4"	1-1/2"	2"	2-1/2"	3"	4"	6"	8"
A	overall length	---	4-3/8"	4-7/8"	5-7/16"	4-29/32"	5-19/32"	6-1/16"	6-3/16"	6-1/2"	8-3/8"	11-13/16"
B	coupler length	---	1-13/32"	1-17/32"	1-29/32"	1-31/32"	2-7/32"	2-1/4"	2-1/4"	2-1/4"	2-5/8"	2-13/16"
C	distance across closed cam arms	---	3-3/32"	3-7/32"	3-29/32"	4-7/32"	4-19/32"	5-1/16"	5-27/32"	6-15/16"	9-31/32"	12"
D	distance across open cam arms	---	6-7/32"	6-11/32"	7-15/32"	7-25/32"	8-5/32"	8-21/32"	9-29/32"	11"	16-25/32"	18-25/32"
E	hose shank O.D.	---	27/32"	1-1/16"	1-11/32"	1-9/16"	2-1/16"	2-19/32"	3-3/32"	4-3/32"	6-3/32"	8-1/16"

316 Stainless Steel Dimensions

	Size	3/4" x 1/2"	3/4"	1"	1-1/4"	1-1/2"	2"	2-1/2"	3"	4"	6"	8"
A	overall length	3-3/32"	3-7/8"	4-1/2"	4-31/32"	5-1/2"	5-5/16"	---	6-15/32"	6-19/32"	8-11/16"	---
B	coupler length	1-5/16"	1-9/32"	1-9/16"	2-1/32"	2-29/32"	2-3/16"	---	2-9/32"	2-11/32"	2-19/32"	---
C	distance across closed cam arms	3-3/32"	3-3/32"	3-1/4"	3-29/32"	4-7/32"	4-19/32"	---	5-27/32"	6-15/16"	9-31/32"	---
D	distance across open cam arms	6-7/32"	6-7/32"	6-11/32"	7-15/32"	7-25/32"	8-5/32"	---	9-29/32"	11"	16-25/32"	---
E	hose shank O.D.	19/32"	27/32"	1-1/16"	1-5/16"	1-19/32"	2-3/32"	---	3-3/32"	4-3/32"	6-1/16"	---

Boss-Lock Type D Couplers

Coupler x Female NPT

Features

- Couplers are supplied standard with a nitrile rubber gasket, other gasket types are available on pages 75-77
- 1/2" Dixon coupler has only one cam arm
- Pull rings are not supplied on 1/2" - 1" Dixon couplings

Size	356T6 Aluminum Part #	Aluminum Hard Coat Part #	Brass Part #
1/2"	50-D-AL	---	50-D-BR
3/4"	75-D-AL	---	75-D-BR
1"	100-D-AL	---	100-D-BR
1-1/4"	125-D-AL	---	125-D-BR
1-1/2"	150-D-AL	150-D-ALH	150-D-BR
2"	200-D-AL	200-D-ALH	200-D-BR
2-1/2"	250-D-AL	---	250-D-BR
3"	300-D-AL	300-D-ALH	300-D-BR
4"	400-D-AL	400-D-ALH	400-D-BR
5"	500-D-AL	---	500-D-BR
6"	600-D-AL	600-D-ALH	600-D-BR
8"	800-D-AL[1, 2]	---	---

[1] Dixon and Boss-Lock cam & groove couplings do not interchange in the 8" size
[2] The 8" Dixon design has 4 cam arms

Size	Unplated Malleable Iron Part #	316 Stainless Steel Part #
1/2"	---	50-D-SS
3/4"	---	75-D-SS
1"	---	100-D-SS
1-1/4"	---	125-D-SS
1-1/2"	150-D-MI	150-D-SS
2"	200-D-MI	200-D-SS
2-1/2"	---	250-D-SS
3"	300-D-MI[1]	300-D-SS
4"	400-D-MI[1]	400-D-SS
5"	500-D-MI	500-D-SS
6"	---	600-D-SS

[1] Ductile iron

356T6 aluminum

aluminum hard coat

brass

unplated malleable iron

316 stainless steel

Dixon® Type D Coupler Dimensions

Coupler X Female NPT

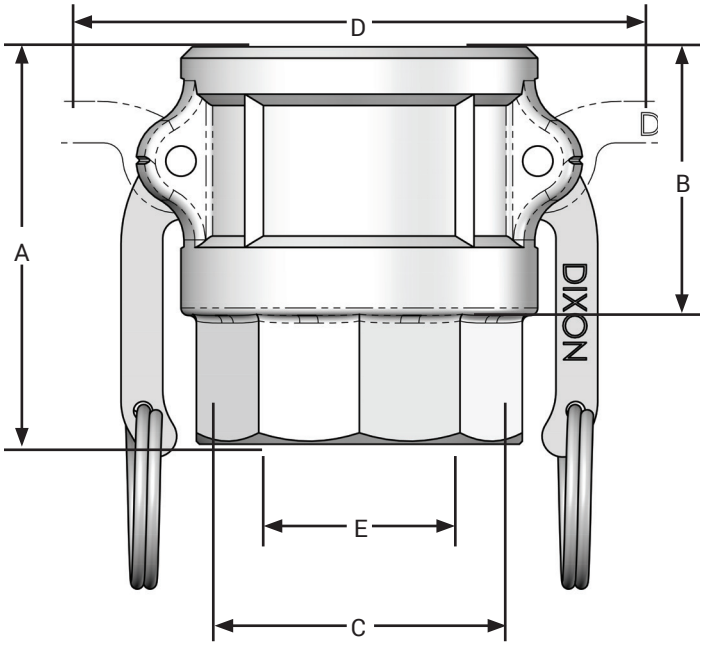

356T6 Aluminum, Brass, and Iron Dimensions

	Size	1/2"	3/4"	1"	1-1/4"	1-1/2"	2"	2-1/2"	3"	4"	5"	6"	8"
A	overall length	1-31/32"	2-5/32"	2-9/16"	2-27/32"	2-27/32"	3-5/16"	3-5/8"	3-11/16"	3-13/16"	3-3/4"	4-11/32"	5-27/32"
B	coupler length	1-9/32"	1-3/8"	1-9/16"	1-15/16"	1-13/16"	2-7/32"	2-3/8"	2-3/8"	2-5/16"	2-5/16"	2-5/8"	3-13/16"
C	distance across closed cam arms	1-17/32"	2-1/8"	2-7/16"	3-1/4"	3-9/16"	3-15/16"	4-7/16"	5-15/32"	6-9/16"	7-9/16"	10-3/32"	12-1/32"
D	distance across open cam arms	2-9/16"	4-3/4"	5-3/16"	7-5/32"	7-7/16"	7-13/16"	8-11/32"	10-3/32"	11-3/16"	12-3/16"	16-1/4"	19-31/32"
E	distance across flats	1-1/16"	1-9/32"	1-19/32"	2"	2-3/16"	2-5/8"	3-7/32"	3-7/8"	4-7/8"	6-9/16"[1]	7-23/32"[1]	10-1/16"[1]

[1] Distance across lugs

316 Stainless Steel Dimensions

	Size	1/2"	3/4"	1"	1-1/4"	1-1/2"	2"	2-1/2"	3"	4"	5"	6"
A	overall length	2"	2-1/16"	2-1/2"	2-27/32"	2-27/32"	3-3/16"	3-3/4"	3-19/32"	3-11/16"	3-13/16"	4-1/16"
B	coupler length	1-7/32"	1-1/4"	1-9/16"	1-29/32"	1-29/32"	2-7/32"	2-1/4"	2-9/32"	2-9/32"	2-5/16"	2-19/32"
C	distance across closed cam arms	1-17/32"	2-1/8"	2-7/16"	3-1/4"	3-9/16"	3-15/16"	4-7/16"	5-15/32"	6-9/16"	7-9/16"	10-3/32"
D	distance across open cam arms	2-5/8"	4-3/8"	5-3/16"	7-5/32"	7-7/16"	7-13/16"	8-11/32"	9-15/16"	11-1/32"	12-3/16"	16-1/4"
E	distance across flats	1-3/32"	1-5/16"	1-5/8"	1-15/16"	2-3/16"	2-11/16"	3-1/8"	3-3/4"	4-7/8"	6-7/16"[1]	7-9/16"[1]

[1] distance across lugs

Boss-Lock Type D Couplers

Coupler x Female NPT

Features

- Couplers are supplied standard with a nitrile rubber gasket, other gasket types are available on pages 75-77
- All Boss-Lock couplers are supplied with pull-ring safety clips

Size	356T6 Aluminum Part #	Brass Part #
3/4" x 1/2"	AD050	BD050
3/4"	AD075	BD075
1"	AD100	BD100
1-1/4"	AD125	BD125
1-1/2"	AD150	BD150
2"	AD200	BD200
2-1/2"	AD250	BD250
3"	AD300	BD300
4"	AD400	BD400
5"	AD500	---
6"	AD600	BD600
8"	AD800[1]	---

Size	Plated Malleable Iron Part #	316 Stainless Steel Part #
3/4" x 1/2"	---	RD050BL
3/4"	ID075	RD075BL
1"	ID100	RD100BL
1-1/4"	---	RD125BL
1-1/2"	ID150	RD150BL
2"	ID200	RD200BL
3"	ID300	RD300BL
4"	ID400	RD400BL
6"	ID600[2]	---

[1] Dixon® and Boss-Lock cam & groove couplings do not interchange in the 8" size.
[2] Ductile iron

356T6 aluminum

brass

plated malleable iron

316 stainless steel

Boss-Lock Type D Coupler Dimensions

Coupler X Female NPT

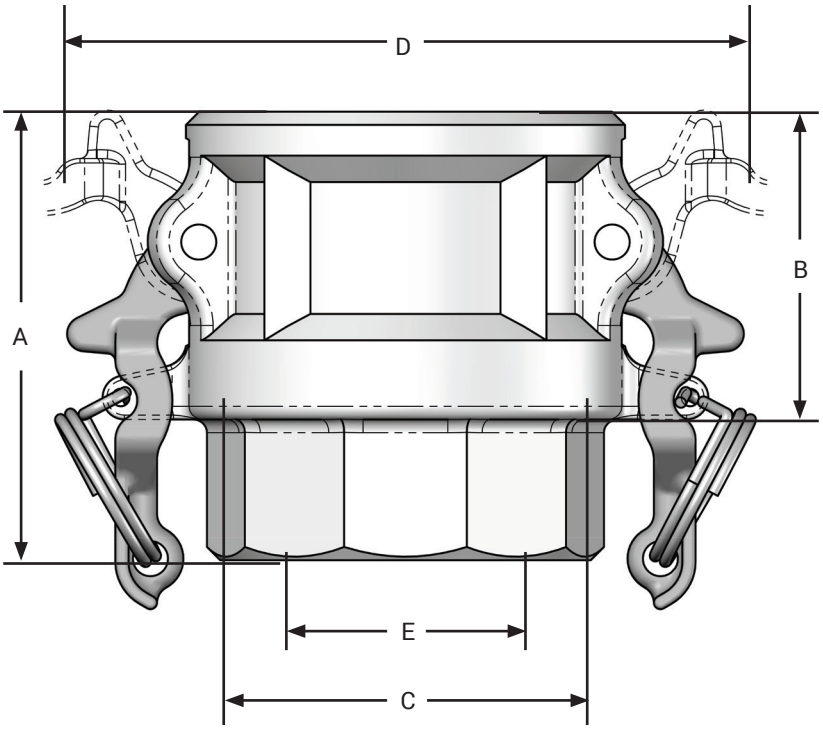

356T6 Aluminum, Brass, and Iron Dimensions

	Size	3/4" x 1/2"	3/4"	1"	1-1/4"	1-1/2"	2"	2-1/2"	3"	4"	5"	6"	8"
A	overall length	2"	2-7/32"	2-17/32"	3-3/32"	2-31/32"	3-1/4"	3-11/16"	3-27/32"	3-13/16"	4-1/8"	4-1/2"	4-1/2"
B	coupler length	1-5/16"	1-13/32"	1-17/32"	1-29/32"	1-31/32"	2-3/16"	2-1/4"	2-9/32"	2-5/16"	2-13/32"	2-9/16"	2-13/16"
C	distance across safety lugs	2-19/32"	2-19/32"	2-29/32"	3-5/8"	3-29/32"	4-5/16"	4-13/16"	5-9/16"	6-11/16"	7-25/32"	9-5/8"	11-5/8"
D	distance across open cam arms	5-13/32"	5-13/32"	5-9/16"	7-15/32"	7-25/32"	8-5/32"	8-21/32"	9-29/32"	11"	12-1/32"	16-5/32"	18-5/32"
E	distance across flats	1-3/16"	1-3/8"	1-5/8"	2"	2-1/4"	2-5/8"	3-5/16"	3-7/8"	4-7/8"	6-1/2"[1]	8-5/32"	9-31/32"

[1] Distance across lugs

316 Stainless Steel Dimensions

	Size	3/4" x 1/2"	3/4"	1"	1-1/4"	1-1/2"	2"	3"	4"
A	overall length	2"	2-1/8"	2-1/2"	3-3/32"	2-27/32"	3-3/16"	3-19/32"	3-23/32"
B	coupler length	1-5/16"	1-9/32"	1-9/16"	1-29/32"	1-29/32"	2-3/16"	2-9/32"	2-5/16"
C	distance across safety lugs	2-25/32"	2-25/32"	2-29/32"	3-5/8"	3-29/32"	4-5/16"	5-9/16"	6-11/16"
D	distance across open cam arms	5-13/32"	5-13/32"	5-9/16"	7-15/32"	7-25/32"	8-5/32"	9-29/32"	11"
E	distance across flats	1-3/16"	1-3/8"	1-5/8"	2"	2-3/16"	2-11/16"	3-3/4"	4-7/8"

EZ Boss-Lock Type D Couplers

Coupler x Female NPT

Feature

- Couplers are supplied standard with a nitrile rubber gasket, other gasket types are available on pages 75-77

Under no circumstances should the EZ Boss-Lock cam arms be used on any fitting not specifically designed for their use. See page 5 for further specifications

Size	356T6 Aluminum Part #	Brass Part #
3/4" x 1/2"	---	---
3/4"	AD075EZ	BD075EZ
1"	AD100EZ	BD100EZ
1-1/4"	---	BD125EZ
1-1/2"	AD150EZ	BD150EZ
2"	AD200EZ	BD200EZ
2-1/2"	AD250EZ	BD250EZ
3"	AD300EZ	BD300EZ
4"	AD400EZ	BD400EZ
	AD400EZP[1]	---
5"	AD500EZ	---
6"	AD600EZ	---
8"	AD800EZ[2]	---

Size	316 Stainless Steel Part #	Heavy Duty 316 Stainless Steel Part #
3/4" x 1/2"	RD050EZ	---
3/4"	RD075EZ	---
1"	RD100EZ	---
1-1/4"	RD125EZ	---
1-1/2"	RD150EZ	---
2"	RD200EZ	---
2-1/2"	RD250EZ	---
3"	RD300EZ	RD300EZHD[3]
4"	RD400EZ	RD400EZHD[4]
5"	---	---
6"	RD600EZ	RD600EZHD[5]
8"	---	RD800EZHD[2]

[1] Includes paddle handle
[2] Dixon® and Boss-Lock cam & groove couplings do not interchange in the 8" size.
[3] Pressure rating of **400 PSI**
[4] Pressure rating of **300 PSI**
[5] Pressure rating of **150 PSI**

356T6 aluminum

brass

316 stainless steel

heavy duty 316 stainless steel

AD400EZP [1]

EZ Boss-Lock Type D Coupler Dimensions

Coupler x Female NPT

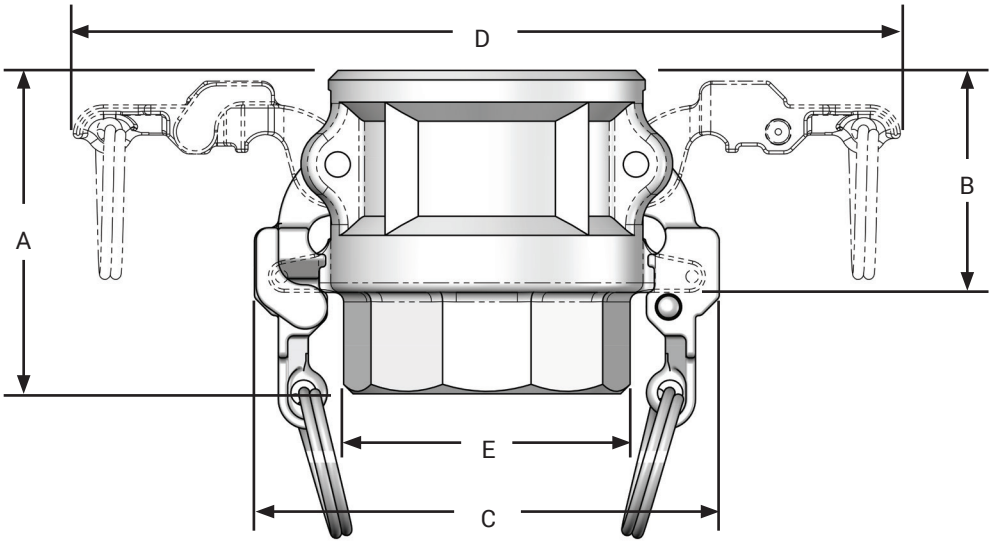

356T6 Aluminum, Brass, and Iron Dimensions

	Size	3/4"	1"	1-1/4"	1-1/2"	2"	2-1/2"	3"	4"	5"	6"	8"
A	overall length	2-7/32"	2-17/32"	3-3/32"	2-7/8"	3-1/4"	3-11/16"	3-27/32"	3-13/16"	4-1/8"	4-1/2"	4-1/2"
B	coupler length	1-13/32"	1-17/32"	1-29/32"	1-31/32"	2-7/32"	2-1/4"	2-9/32"	2-5/16"	2-13/32"	2-5/8"	2-13/16"
C	distance across closed cam arms	3-3/32"	3-7/32"	3-29/32"	4-7/32"	4-19/32"	5-1/16"	5-27/32"	6-15/16"	7-7/5"	9-31/32"	12"
D	distance across open cam arms	6-7/32"	6-11/32"	7-15/32"	7-25/32"	8-5/32"	8-21/32"	9-29/32"	11"	12-1/16"	16-25/32"	18-25/32"
E	distance across flats	1-3/8"	1-5/8"	2"	2-1/4"	2-5/8"	3-5/16"	3-7/8"	4-7/8"	6-25/32"[1]	8-5/32"	9-31/32"

[1] Distance across lugs

316 Stainless Steel Dimensions

	Size	3/4" x 1/2"	3/4"	1"	1-1/4"	1-1/2"	2"	2-1/2"	3"	4"	6"
A	overall length	2"	2-1/8"	2-1/2"	3-3/32"	2-27/32"	3-3/16"	3-11/16"	3-19/32"	3-23/32"	4-1/16"
B	coupler length	1-5/16"	1-9/32"	1-9/16"	1-29/32"	1-29/32"	2-3/16"	2-1/4"	2-9/32"	2-5/16"	2-19/32"
C	distance across closed cam arms	3-3/32"	3-3/32"	3-1/4"	3-29/32"	4-7/32"	4-19/32"	5-1/16"	5-27/32"	6-15/16"	9-31/32"
D	distance across open cam arms	6-7/32"	6-7/32"	6-11/32"	7-15/32"	7-25/32"	8-5/32"	8-21/32"	9-29/32"	11"	16-25/32"
E	distance across flats	1-3/16"	1-3/8"	1-5/8"	2"	2-3/16"	2-11/16"	3-5/16"	3-3/4"	4-7/8"	7-9/16"

Type E Adapters

Adapter x Hose Shank

Feature

- Pressure rating is based on the seal of the mating part

Size	356T6 Aluminum Part #	Aluminum Hard Coat Part #	Brass Part #
1/2"	50-E-AL	---	50-E-BR
3/4" x 1/2"	7550-E-AL	---	---
3/4"	75-E-AL	---	75-E-BR
1"	100-E-AL	---	100-E-BR
1-1/4"	125-E-AL	---	125-E-BR
1-1/2"	150-E-AL	150-E-ALH	150-E-BR
2"	200-E-AL	200-E-ALH	200-E-BR
2-1/2"	250-E-AL	---	250-E-BR
3"	300-E-AL	300-E-ALH	300-E-BR
4"	400-E-AL	400-E-ALH	400-E-BR
5"	500-E-AL	---	---
6"	600-E-AL	600-E-ALH	600-E-BR
8" DIX	800-E-AL[1]	---	---
8" BL	801-E-AL[1]	---	---

[1] Dixon® and Boss-Lock cam & groove couplings do not interchange in the 8" size.

356T6 aluminum

aluminum hard coat

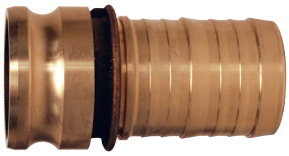

brass

Size	Unplated Malleable Iron Part #	Plated Malleable Iron Part #	316 Stainless Steel Part #
1/2"	---	---	50-E-SS
3/4" x 1/2"	---	---	7550-E-SS
3/4"	---	75-E-PM	75-E-SS
1"	---	100-E-PM	100-E-SS
1-1/4"	---	125-E-PM	125-E-SS
1-1/2"	150-E-MI	150-E-PM	150-E-SS
2"	200-E-MI[2]	200-E-PM[2]	200-E-SS
2-1/2"	---	---	250-E-SS
3"	300-E-MI[1, 2]	300-E-PM[1, 2]	300-E-SS
4"	400-E-MI[1, 2]	400-E-PM[1, 2]	400-E-SS
5"	---	---	500-E-SS
6"	600-E-MI[1, 2]	600-E-PM[1, 2]	600-E-SS

unplated malleable iron

plated malleable iron

316 stainless steel

[1] Suitable for King Crimp® sleeves and ferrules, for a full list of products in the King Crimp system please visit dixonvalve.com

[2] Ductile iron

Type E Adapters Dimensions

Adapter x Hose Shank

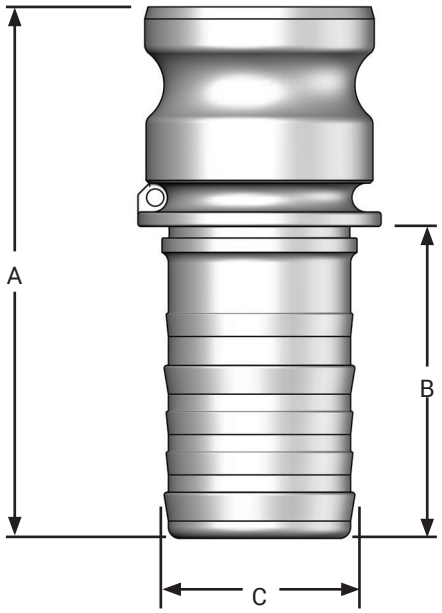

356T6 Aluminum, Brass, and Iron Dimensions

	Size	1/2"	3/4"x 1/2"	3/4"	1"	1-1/4"	1-1/2"	2"	2-1/2"	3"	4"	5"	6"	8" DIX	8" BL
A	overall length	2-1/2"	2-3/4"	3-15/16"	4-5/8"	4-7/8"	5-1/16"	6-1/32"	6-1/4"	6-25/32"	7-3/16"	7-5/32"	9-5/32"	11-13/16"	11-7/16"
B	hose shank length	1-7/16"	1-5/16"	2-3/8"	2-15/16"	2-13/16"	2-29/32"	3-3/8"	3-3/4"	4-7/32"	4-1/4"	4-1/4"	6-1/32"	8"	8"
C	hose shank O.D.	9/16"	19/32"	27/32"	1-1/16"	1-11/32"	1-9/16"	2-1/16"	2-19/32"	3-3/32"	4-3/32"	5-3/32"	6-1/16"	8-1/16"	8-3/32"

316 Stainless Steel Dimensions

	Size	1/2"	3/4"x 1/2"	3/4"	1"	1-1/4"	1-1/2"	2"	2-1/2"	3"	4"	5"	6"	8" DIX	8" BL
A	overall length	2-1/2"	2-3/4"	3-15/16"	4-5/8"	4-7/8"	5-1/16"	6-1/32"	6-1/4"	6-25/32"	7-3/16"	7-5/32"	9-7/16"	---	---
B	hose shank length	1-7/16"	1-5/16"	2-3/8"	2-15/16"	2-13/16"	2-29/32"	3-3/8"	3-3/4"	4-7/32"	4-1/4"	4-1/4"	6-3/32"	---	---
C	hose shank O.D.	9/16"	19/32"	27/32"	1-1/16"	1-11/32"	1-9/16"	2-1/16"	2-19/32"	3-3/32"	4-3/32"	5-3/32"	6-1/16"	---	---

Type F Adapters x NPT

Adapter x Male NPT

Feature

- Pressure rating is based on the seal of the mating part

Size	356T6 Aluminum Part #	Aluminum Hard Coat Part #	Brass Part #
1/2"	50-F-AL[2]	---	50-F-BR
3/4" x 1/2"	7550-F-AL[2]	---	7550-F-BR
3/4"	75-F-AL[2]	---	75-F-BR
1"	100-F-AL[2]	---	100-F-BR
1-1/4"	125-F-AL	---	125-F-BR
1-1/2"	150-F-AL	150-F-ALH	150-F-BR
2"	200-F-AL	200-F-ALH	200-F-BR
2-1/2"	250-F-AL	---	250-F-BR
3"	300-F-AL	300-F-ALH	300-F-BR
4"	400-F-AL	400-F-ALH	400-F-BR
5"	500-F-AL	---	---
6"	600-F-AL	600-F-ALH	600-F-BR
8" DIX	800-F-AL[1]	---	---
8" BL	801-F-AL[1]	---	---

[1] Dixon® and Boss-Lock cam & groove couplings do not interchange in the 8" size.
[2] Made from 6061-T6 aluminum

356T6 aluminum

aluminum hard coat

brass

Size	Unplated Malleable Iron Part #	Plated Malleable Iron Part #	316 Stainless Steel Part #
1/2"	---	---	50-F-SS
3/4" x 1/2"	---	---	7550-F-SS
3/4"	---	75-F-PM[1]	75-F-SS
1"	---	100-F-PM[1]	100-F-SS
1-1/4"	---	---	125-F-SS
1-1/2"	150-F-MI	150-F-PM	150-F-SS
2"	200-F-MI	200-F-PM	200-F-SS
2-1/2"	---	---	250-F-SS
3"	300-F-MI	300-F-PM	300-F-SS
4"	400-F-MI	400-F-PM	400-F-SS
6"	---	600-F-PM	600-F-SS

[1] Zinc plated carbon steel

unplated malleable iron

plated malleable iron

316 stainless

Type F Adapters Dimensions

Adapter x Male NPT

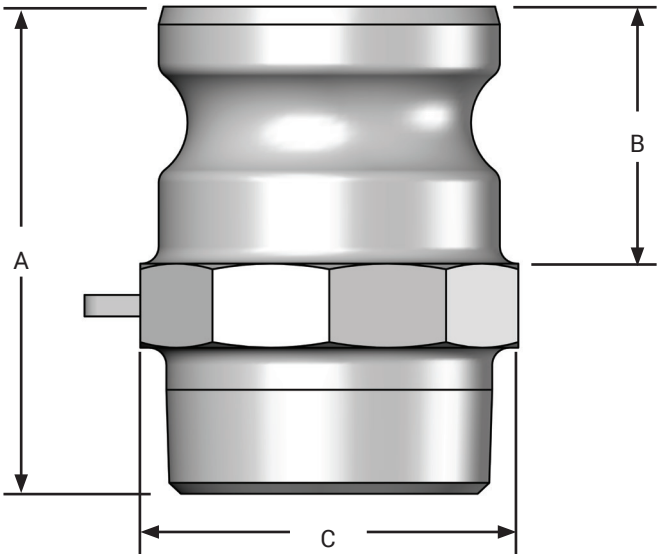

356T6 Aluminum, Brass, and Iron Dimensions

Size		1/2"	3/4"x 1/2"	3/4"	1"	1-1/4"	1-1/2"	2"	2-1/2"	3"	4"	5"	6"	8" DIX	8" BL
A	overall length	2-1/2"	"2-3/4	3-15/16"	4-5/8"	4-7/8"	5-1/16"	6-1/32"	6-1/4"	6-25/32"	7-3/16"	7-5/32"	9-5/32"	11-13/16"	11-7/16"
B	adapter length	1-1/16"	1-1/16"	1-1/16"	1-5/16"	1-9/16"	1-5/8"	1-7/8"	1-15/16"	2"	2-1/16"	2-5/16"	2-1/4"	3-9/16"	3-1/16"
C	distance across flats	1"	1-5/16"	1-3/8"	1-1/2"	1-7/8"	2-1/4"	2-11/16"	3-1/4"	3-3/4"	4-15/16"	6-1/2"	8-1/32"	10-23/32"	10-23/32"

316 Stainless Steel Dimensions

Size		1/2"	3/4" x 1/2"	3/4"	1"	1-1/4"	1-1/2"	2"	2-1/2"	3"	4"	5"	6"	8" DIX	8" BL
A	overall length	2-1/8"	2-1/16"	2-1/8"	2-9/16"	3-7/32"	3-1/8"	3-17/32"	4-5/16"	4-15/32"	4-15/16"	---	4-15/16"	---	---
B	adapter length	1-1/16"	1-1/16"	1-1/16"	1-5/16"	1-9/16"	1-5/8"	1-7/8"	1-15/16"	2"	2-1/16"	---	2-1/4"	---	---
C	distance across flats	1"	1-5/16"	1-5/16"	1-1/4"	1-15/16"	2-1/4"	2-3/4"	3-1/4"	3-3/4"	5"	---	7-3/4"	---	---

Type E Adapters with Swaged Ferrule

Application

- Developed specifically for chemical transport hoses having Crosslinked Polyethylene (XLPE) or Ultra High Molecular Weight Polyethylene (UHMW) tubes.

Features

- Provides a permanently attached cam & groove fitting when superior coupling retention is required
- Testing tank transport hoses from a wide variety of manufacturers proved the swaged Boss-Lock fitting to be the leader in overall performance
- Other sizes or hose O.D.s available on special order. Consult Dixon® for pricing and availability
- Special equipment required for installation, consult Dixon for pricing and availability

Size	Hose O.D.		316 Stainless Steel Part #
	from	to	
3/4"	1-6/64"	1-22/64"	RE075-1370
1"	1-29/64"	1-35/64"	RE100-1620
1"	1-36/64"	1-44/64"	RE100-1770

Type E Adapters with Notched Shank

Adapter x Hose Shank

Features

- Can be removed from a damaged hose by cutting away the ferrule without necessarily damaging the fitting, after inspection of the fitting to determine its suitability for reuse, it can be reinstalled into another hose by using a new ferrule
- System allows you to better manage your inventory: stock one coupling and two ferrules and cover the same hose range with less inventory, you must purchase a fitting and the matching ferrule to create an assembly
- For use with notched ferrules below

Dixon stems and ferrules are specifically designed to be used together as a coupling system. Due to differences in dimensions and tolerances for safety reasons, do not use other manufacturers' stems or ferrules with Dixon products.

swaged assembly

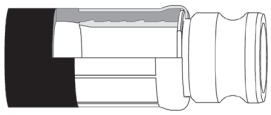

crimped assembly

Size	316 Stainless Steel Part #
1-1/2"	RE150NO
2"	RE200NO
3"	RE300NO
4"	RE400NO

Notched Ferrules

- Reference notched shanks and adapters above
- Dixon stems and ferrules are specifically designed to be used together as a coupling system, due to differences in dimensions and tolerances for safety reasons, do not use other manufacturers' stems or ferrules with Holedall® products.

Size	Hose O.D.		304 Stainless Steel Part #
	From	To	
1-1/2"	1-60/64"	2-12/64"	GAS2334NO
	2-4/64"	2-22/64"	GAS2370NO
2"	2-30/64"	2-44/64"	GAS2709NO
	2-42/64"	2-54/64"	GAS2885NO
2-1/2"	2-54/64"	3"	GAS3012NO
	3-1/64"	3-13/64"	GAS3260NO
3"	3-30/64"	3-46/64"	GAS3760NO
	3-47/64"	3-54/64"	GAS3885NO
4"	4-40/64"	4-47/64"	GAS5010NO

Type E Adapters with Notched NOS shank

Adapter x Shank

Features

- System allows you to better manage your inventories, you can stock one stem and two ferrules, and cover the same hose range with less inventory, you must purchase a fitting and the matching ferrule to create an assembly
- For hose outside diameters of 2-4/64" and below, the couplings are crimp only
- For hose outside diameters of 2-5/64" and above, the couplings can be crimped or swaged
- For use with NOS ferrules listed below

Size	316 Stainless Steel Part #
1-1/2"	---
2"	200ENOSSS
3"	300ENOSSS

Only use the NOS shank with the NOS ferrules.
Due to differences in dimensions and tolerances for safety reasons, do not use other manufacturers' stems or ferrules with Dixon® products.

Notched NOS Ferrules

Size	Hose O.D.		304 Stainless Steel Part #
	From	To	
1-1/2"	1-60/64"	2-12/64"	GAS2334NOS
	2-4/64"	2-22/64"	GAS2370NOS
2"	2-30/64"	2-44/64"	GAS2709NOS
	2-42/64"	2-54/64"	GAS2885NOS
3"	3-30/64"	3-46/64"	GAS3760NOS
	3-47/64"	3-54/64"	GAS3885NOS
4"	4-40/64"	4-47/64"	GAS5010NOS

NOTE: Reference notched shanks and adapters above

Dixon® Type DC Dust Caps

Features
- Nitrile rubber gasket supplied standard; other gaskets available on pages 75-77
- 1/2" Dixon has only one cam arm
- Pull rings are not supplied on 1/2" - 1" Dixon couplings
- Dust caps and dust plugs are not to be used in pressure applications for safety and environmental reasons

Size	356T6 Aluminum Part #	Aluminum Hard Coat Part #	Brass Part #
1/2"	50-DC-AL	---	50-DC-BR
3/4"	75-DC-AL	---	75-DC-BR
1"	100-DC-AL	---	100-DC-BR
1-1/2"	150-DC-AL	150-DC-ALH	150-DC-BR
2"	200-DC-AL	200-DC-ALH	200-DC-BR
2-1/2"	250-DC-AL	---	---
3"	300-DC-AL	300-DC-ALH	300-DC-BR
4"	400-DC-AL	400-DC-ALH	400-DC-BR
5"	500-DC-AL	---	500-DC-BR
6"	600-DC-AL	600-DC-ALH	---
8"	800-DC-AL[1,2]	---	---

[1] Dixon and Boss-Lock cam & groove couplings do not interchange in the 8" size
[2] The 8" Dixon dust cap has 2 cam arms

Size	Unplated Malleable Iron Part #	316 Stainless Steel Part #
1/2"	---	50-DC-SS
3/4"	---	75-DC-SS
1"	---	100-DC-SS
1-1/2"	---	150-DC-SS
2"	200-DC-MI	200-DC-SS
2-1/2"	---	250-DC-SS
3"	300-DC-MI	300-DC-SS
4"	400-DC-MI	400-DC-SS
5"	---	500-DC-SS
6"	---	600-DC-SS

356T6 aluminum

aluminum hard coat

brass

unplated malleable iron

316 stainless steel

Dixon® Type DC Dust Caps Dimensions

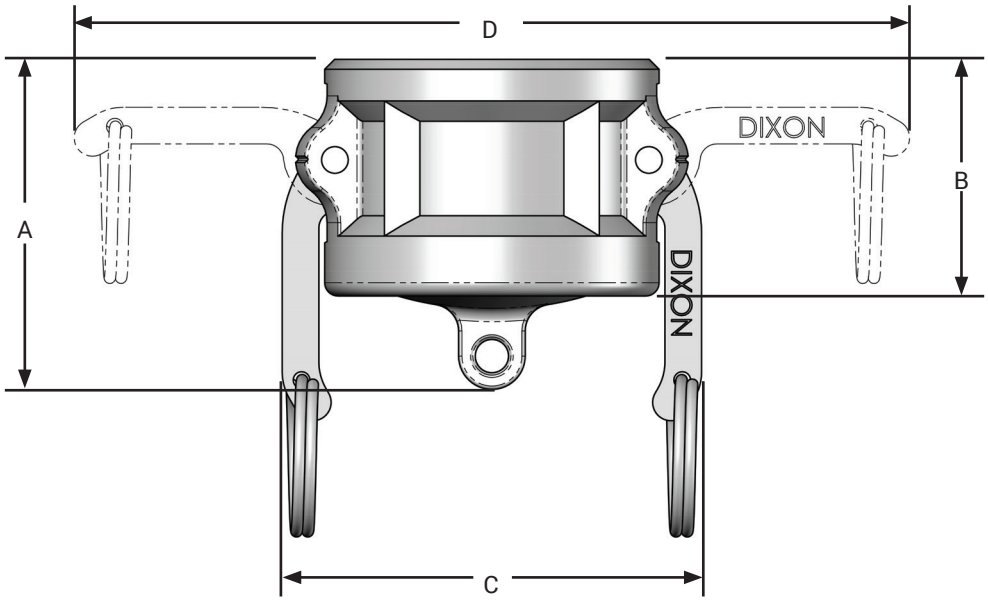

356T6 Aluminum, Brass, and Iron Dimensions

	Size	1/2"	3/4"	1"	1-1/2"	2"	2-1/2"	3"	4"	5"	6"	8"
A	overall length	1-25/32"	2-1/32"	2-11/32"	2-11/16"	3"	2-7/8"	3-1/8"	3-21/32"	3-1/2"	3-3/16"	5-7/16"
B	coupler length	1-7/32"	1-11/32"	1-21/32"	1-13/16"	2-7/32"	2-3/16"	2-1/4"	2-5/16"	2-5/16"	2-5/8"	3-13/16"
C	distance across safety lugs	1-17/32"	2-1/8"	2-7/16"	3-9/16"	3-15/16"	4-7/16"	5-15/32"	6-9/16"	7-9/16"	10-3/32"	12-1/32"
D	distance across open cam arms	2-11/16"	4-3/8"	5-3/16"	7-7/16"	7-13/16"	8-11/32"	10-3/32"	11-3/16"	12-3/16"	16-1/4"	19-31/32"

316 Stainless Steel Dimensions

	Size	1/2"	3/4"	1"	1-1/2"	2"	2-1/2"	3"	4"	5"	6"
A	overall length	1-23/32"	1-3/4"	2-3/16"	2-13/16"	3-3/32"	3-1/16"	3-1/8"	3-17/32"	3-3/8"	3-3/4"
B	coupler length	1-7/32"	1-1/4"	1-9/16"	1-29/32"	2-7/32"	2-1/4"	2-9/32"	2-9/32"	2-7/16"	2-19/32"
C	distance across closed cam arms	1-17/32"	2-1/8"	2-7/16"	3-9/16"	3-15/16"	4-7/16"	5-15/32"	6-9/16"	7-9/16"	10-3/32"
D	distance across open cam arms	2-5/8"	4-3/8"	5-3/16"	7-7/16"	7-13/16"	8-11/32"	9-15/16"	11-1/32"	12-3/16"	16-1/4"

Dixon® Lockable Dust Caps

Features
- Nitrile rubber gasket standard, other gaskets available on pages 75-77
- Dust caps and dust plugs are not to be used in pressure applications for safety and environmental reasons

Size	356T6 Aluminum Part #	Brass Part #
1-1/2"	150DC-LAL	150DC-LBR
2"	200DC-LAL	200DC-LBR
3"	300DC-LAL	300DC-LBR
4"	400DC-LAL	---
6"	600DC-LAL	---

Feature
- Angled, ergonomic thumb release

Size	316 Stainless Steel Part #
1-1/2"	150DC-LSS
2"	200DC-LSS
3"	300DC-LSS
4"	400DC-LSS

Boss-Lock Type H Dust Caps

Features
- Nitrile rubber gasket standard, other gaskets available on pages 75-77
- Supplied with pull-ring safety clips
- Dust caps and dust plugs are not to be used in pressure applications for safety and environmental reasons

Size	356T6 Aluminum Part #	Brass Part #
1"	AH100	BH100
1-1/4"	AH125	BH125
1-1/2"	AH150	BH150
2"	AH200	BH200
2-1/2"	AH250	BH250
3"	AH300	BH300
4"	AH400	BH400
6"	AH600	BH600
8"	AH800[1]	---

356T6 aluminum

brass

Size	Plated Malleable Iron Part #	316 Stainless Steel Part #
3/4"	---	RH075BL
1"	---	RH100BL
1-1/4"	---	RH125BL
1-1/2"	IH150	RH150BL
2"	IH200	RH200BL
3"	IH300	RH300BL
4"	IH400	RH400BL
6"	IH600	---

plated malleable iron

316 stainless steel

[1] Dixon and Boss-Lock cam & groove couplings do not interchange in the 8" size

Boss-Lock Type H Dust Caps Dimensions

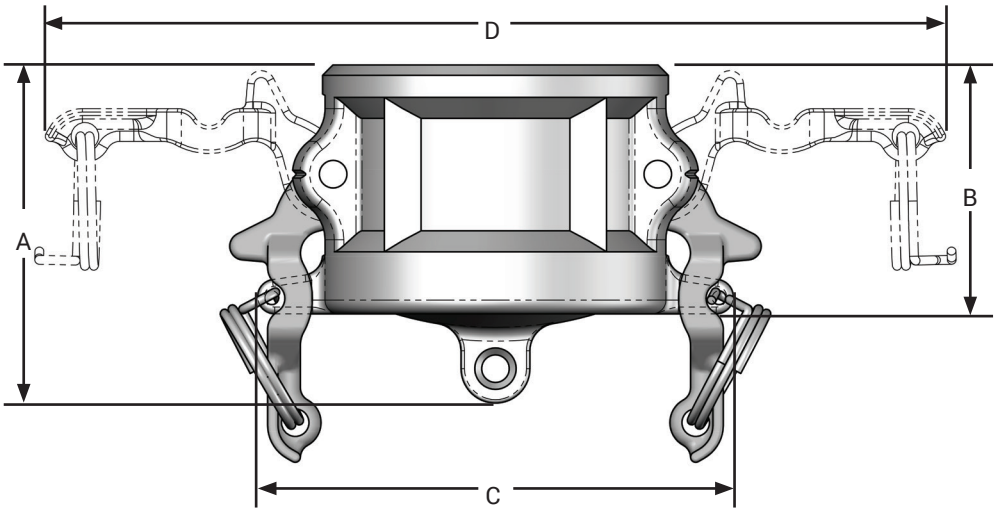

356T6 Aluminum, Brass, and Iron Dimensions

	Size	1"	1-1/4"	1-1/2"	2"	2-1/2"	3"	4"	6"	8"
A	overall length	2-3/16"	2-3/4"	2-15/16"	3-1/16"	3-7/32"	3-1/8"	3-11/32"	3-29/32"	4-9/16"
B	coupler length	1-17/32"	1-29/32"	1-29/32"	2-3/16"	2-1/4"	2-5/16"	2-5/16"	2-5/8"	2-13/16"
C	distance across safety lugs	2-29/32"	3-5/8"	3-29/32"	4-5/16"	4-13/16"	5-9/16"	6-11/16"	9-5/8"	11-5/8"
D	distance across open cam arms	5-9/16"	7-15/32"	7-25/32"	8-5/32"	8-21/32"	9-29/32"	11"	16-5/32"	18-5/32"

316 Stainless Steel Dimensions

	Size	3/4"	1"	1-1/4"	1-1/2"	2"	3"	4"
A	overall length	1-15/16"	2-1/4"	2-3/4"	2-13/16"	3-1/16"	3-1/8"	3-19/32"
B	coupler length	1-9/32"	1-9/16"	1-29/32"	1-29/32"	2-1/4"	2-9/32"	2-5/16"
C	distance across safety lugs	2-25/32"	2-29/32"	3-5/8"	3-29/32"	4-5/16"	5-9/16"	6-11/16"
D	distance across open cam arms	5-13/32"	5-9/16"	7-15/32"	7-25/32"	8-5/32"	9-29/32"	11"

EZ Boss-Lock Type H Dust Caps

356T6 aluminum

brass

316 stainless steel

Features

- Nitrile rubber gasket standard, other gaskets available on pages 75-77
- Dust caps and dust plugs are not to be used in pressure applications for safety and environmental reasons

Size	356T6 Aluminum Part #	Brass Part #	316 Stainless Steel Part #
3/4"	---	---	RH075EZ
1"	AH100EZ	BH100EZ	RH100EZ
1-1/4"	---	---	RH125EZ
1-1/2"	AH150EZ	BH150EZ	RH150EZ
2"	AH200EZ	BH200EZ	RH200EZ
2-1/2"	AH250EZ	---	---
3"	AH300EZ	BH300EZ	RH300EZ
4"	AH400EZ	---	RH400EZ
6"	AH600EZ	---	RH600EZ

NOTE: Under no circumstances should the EZ Boss-Lock cam arms be used on any fitting not specifically designed for their use. See pages 5 and 73 for further specifications.

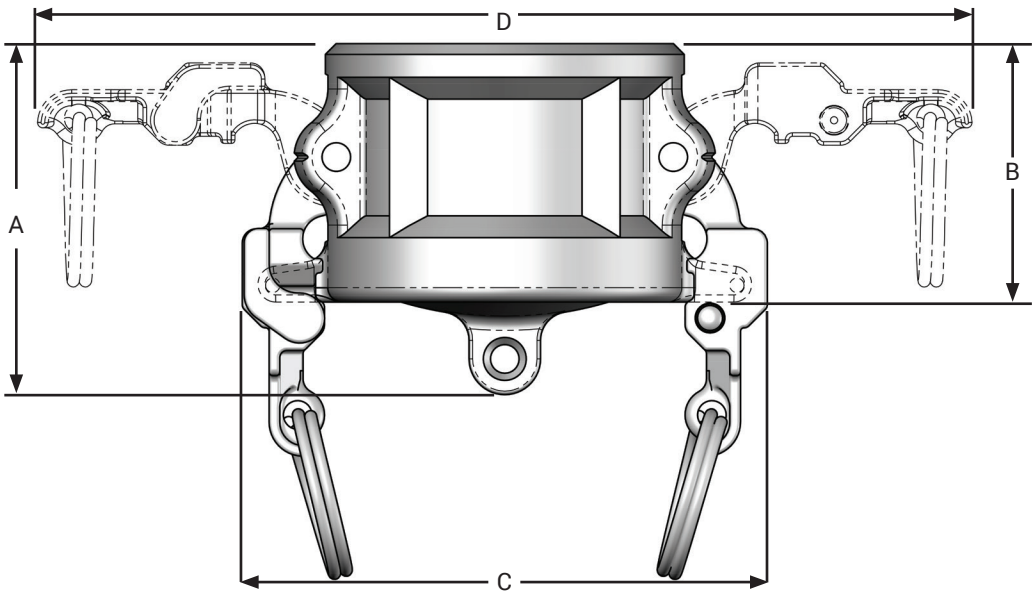

356T6 Aluminum, Brass, and Iron Dimensions

	Size	1"	1-1/2"	2"	2-1/2"	3"	4"	6"
A	overall length	2-3/16	2-15/16	3-1/16	3-7/32	3-1/8	3-11/32	3-29/32
B	coupler length	1-17/32	1-29/32	2-3/16	2-1/4	2-5/16	2-5/16	2-5/8
C	distance across closed cam arms	3-7/32	4-7/32	4-19/32	5-1/16	5-27/32	6-15/16	9-31/32
D	distance across open cam arms	6-11/32	7-25/32	8-5/32	8-21/32	9-29/32	11	16-25/32

316 Stainless Steel Dimensions

	Size	3/4"	1"	1-1/4"	1-1/2"	2"	3"	4"	6"
A	overall length	1-15/16	2-1/4	2-3/4	2-13/16	3-1/16	3-1/8	3-19/32	3-3/4
B	coupler length	1-9/32	1-9/16	1-29/32	1-29/32	2-1/4	2-9/32	2-5/16	2-19/32
C	distance across closed cam arms	3-3/32	3-1/4	3-29/32	4-7/32	4-19/32	5-27/32	6-15/16	9-31/32
D	distance across open cam arms	6-7/32	6-11/32	7-15/32	7-25/32	8-5/32	9-29/32	11	16-25/32

Type DP Dust Plugs

356T6 aluminum

aluminum hard coat

brass

unplated malleable iron

plated malleable iron

316 stainless steel

Feature

- Dust caps and dust plugs are not to be used in pressure applications for safety and environmental reasons

Size	356T6 Aluminum Part #	Aluminum Hard Coat Part #	Brass Part #
1/2"	---	---	50-DP-BR
3/4"	75-DP-AL	---	75-DP-BR
1"	100-DP-AL	---	100-DP-BR
1-1/4"	125-DP-AL	---	125-DP-BR
1-1/2"	150-DP-AL	150-DP-ALH	150-DP-BR
2"	200-DP-AL	200-DP-ALH	200-DP-BR
2-1/2"	250-DP-AL	---	---
3"	300-DP-AL	300-DP-ALH	300-DP-BR
4"	400-DP-AL	400-DP-ALH	400-DP-BR
5"	500-DP-AL	---	---
6"	600-DP-AL	---	600-DP-BR
8" DIX	800-DP-AL[1]	---	---
8" BL	801-DP-AL[1]	---	---

[1] Dixon® and Boss-Lock cam & groove couplings do not interchange in the 8" size

Size	Unplated Malleable Iron Part #	Plated Malleable Iron Part #	316 Stainless Steel Part #
1/2"	---	---	50-DP-SS[1]
3/4"	---	---	75-DP-SS
1"	---	---	100-DP-SS
1-1/4"	---	---	125-DP-SS
1-1/2"	---	---	150-DP-SS
2"	200-DP-MI	200-DP-PM	200-DP-SS
2-1/2"	---	---	250-DP-SS
3"	300-DP-MI	300-DP-PM	300-DP-SS
4"	400-DP-MI	400-DP-PM	400-DP-SS
6"	---	---	600-DP-SS

Type DP Dust Plugs Dimensions

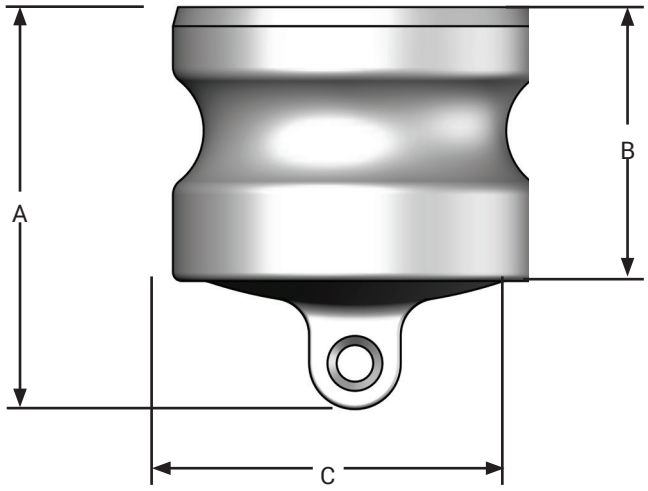

356T6 Aluminum, Brass, and Iron Dimensions

Size		1/2"	3/4"	1"	1-1/4"	1-1/2"	2"	2-1/2"	3"	4"	5"	6"	8" DIX	8" BL
A	overall length	1-7/16"	1-3/4"	1-29/32"	2-3/8"	2-13/32"	2-13/16"	2-13/16"	2-13/16"	3-1/16"	3-3/8"	3-1/16"	5-3/16"	4-11/16"
B	adapter length	15/16"	1-3/32"	1-5/16"	1-9/16"	1-5/8"	1-7/8"	1-15/16"	2"	2-1/16"	2-11/32"	2-1/4"	3-9/16"	3-1/16"
C	outside O.D.	15/16"	1-1/4"	1-7/16"	1-25/32"	2-3/32"	2-15/32"	2-31/32"	3-19/32"	4-23/32"	5-23/32"	6-15/16"	9-3/32"	8-15/16"

316 Stainless Steel Dimensions

Size		1/2"	3/4"	1"	1-1/4"	1-1/2"	2"	2-1/2"	3"	4"	5"	6"	8" DIX	8" BL
A	overall length	1-7/16"	1-11/16"	1-15/16"	2-1/4"	2-1/2"	2-3/4"	2-7/8"	2-27/32"	3-1/8"	---	3-1/2"	---	---
B	adapter length	15/16"	15/16"	1-15/16"	1-9/16"	1-5/8"	1-7/8"	1-15/16"	2"	2-1/16"	---	2-1/4"	---	---
C	outside O.D.	15/16"	1-1/4"	1-7/16"	1-25/32"	2-3/32"	2-15/32"	2-31/32"	3-19/32"	4-23/32"	---	6-15/16"	---	---

Hastelloy® Cam & Groove
Type A Adapters
Adapter x Female NPT

Size	Hastelloy CW12MW Part #
1"	100-A-HA
1-1/2"	150-A-HA
2"	200-A-HA
3"	300-A-HA

NOTE: Pressure rating is based on the seal material of the mating part. See rating on page 3

Hastelloy Cam & Groove
Type E Adapters
Adapter x Shank

Size	Hastelloy CW12MW Part #
1"	100-E-HA[1]
1-1/2"	150-E-HA
2"	200-E-HA[1]
3"	300-E-HA

[1] Have King Crimp® shank
NOTE: Pressure rating is based on the seal material of the mating part. See rating on page 3

Hastelloy Cam & Groove
Type F Adapters
Adapter x Male NPT

Size	Hastelloy CW12MW Part #
1"	100-F-HA
1-1/2"	150-F-HA
2"	200-F-HA
3"	300-F-HA

NOTE: Pressure rating is based on the seal material of the mating part. See rating on page 3.

Hastelloy® Cam & Groove
EZ Boss-Lock Type B Couplers
Coupler x Male NPT

Feature
- Couplers supplied with FKM-A gaskets

Materials
- Cam arms: 316 stainless steel
- Pins: 303 stainless steel
- Rings: Trivalent chrome plated 12 gauge steel wire

Size	Hastelloy CW12MW Part #
1"	HAB100EZ
1-1/2"	HAB150EZ
2"	HAB200EZ
3"	HAB300EZ

Hastelloy Cam & Groove
EZ Boss-Lock Type C Couplers
Coupler x Hose Shank

Feature
- Couplers supplied with FKM-A gaskets

Materials
- Cam arms: 316 stainless steel
- Pins: 303 stainless steel
- Rings: Trivalent chrome plated 12 gauge steel wire

Size	Hastelloy CW12MW Part #
1"	HAC100EZ[1]
1-1/2"	HAC150EZ
2"	HAC200EZ[1]
3"	HAC300EZ

[1] King Crimp® shank

Hastelloy Cam & Groove
EZ Boss-Lock Type D Couplers
Coupler x Female NPT

Feature
- Couplers supplied with FKM-A gaskets

Materials
- Cam arms: 316 stainless steel
- Pins: 303 stainless steel
- Rings: Trivalent chrome plated 12 gauge steel wire

Size	Hastelloy CW12MW Part #
1"	HAD100EZ
1-1/2"	HAD150EZ
2"	HAD200EZ
3"	HAD300EZ

Dixon® Type DA Couplings with Port

Coupler x Adapter

Feature

- Nitrile rubber gasket standard, other gaskets available on pages 75-77

Size	Port	316 Stainless Steel Part #
3" x 3"	1/4"	300DAT25SS
3" x 3"	3/8"	300DAT38SS
3" x 3"	1/2"	300DAT50SS
3" x 3"	3/4"	300DAT75SS

Dixon Type DA Jump Size Couplings

Coupler x Adapter

4030-DA-SS

4060-DA-AL

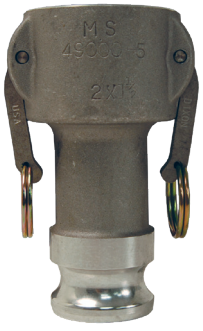
2015-DA-AL

5060-DA-AL

Feature

- Nitrile rubber gasket standard, other gaskets available on pages 75-77

Size	356T6 Aluminum Part #	316 Stainless Steel Part #
1" x 1-1/2"	1015-DA-AL[1]	1015-DA-SS[1]
1-1/2" x 1"	1510DAAL	1510-DA-SS[1]
1-1/2" x 2"	1520-DA-AL	1520-DA-SS
2" x 1"	2010-DA-AL[1]	2010-DA-SS
2" x 1-1/2"	2015-DA-AL	2015-DA-SS
2" x 2-1/2"	2025-DA-AL[1]	2025-DA-SS[1]
2" x 3"	2030-DA-AL	2030-DA-SS
2" x 4"	2040-DA-AL	2040-DA-SS[1]
2-1/2" x 2"	---	2520-DA-SS[1]
2-1/2" x 3"	---	2530-DA-SS[1]
3" x 1-1/2"	3015-DA-AL	3015-DA-SS[1]
3" x 2"	3020-DA-AL	3020-DA-SS
3" x 2-1/2"	3025-DA-AL	3025-DA-SS[1]
3" x 4"	3040-DA-AL	3040-DA-SS
3" x 6"	3060-DA-AL[1]	3060-DA-SS[1]
4" x 2"	4020-DA-AL	4020-DA-SS[1]
4" x 2-1/2"	4025-DA-AL	4025-DA-SS[1]
4" x 3"	4030-DA-AL	4030-DA-SS
4" x 5"	4050-DA-AL	---
4" x 6"	4060-DA-AL	4060-DA-SS[1]
5" x 3"	5030-DA-AL[1]	5030-DA-SS[1]
5" x 4"	5040-DA-AL	5040-DA-SS[1]
5" x 6"	5060-DA-AL[1]	5060-DA-SS[1]
6" x 3"	6030-DA-AL	6030-DA-SS[1]
6" x 4"	6040-DA-AL	6040-DA-SS
6" x 5"	6050-DA-AL	6050-DA-SS[1]
8" x 6"	8060-DA-AL[1, 2]	---

[1] Parts are produced as a welded fabrication

[2] The 8" coupler only interchanges with Dixon® adapters.

Size	Brass Part #	Unplated Malleable Iron Part #
3" x 2"	3020-DA-BR	3020-DA-MI
3" x 4"	3040-DA-BR	---
4" x 3"	4030-DA-BR	4030-DA-MI
6" x 4"	6040-DA-BR	6040-DA-MI

NOTE: In jump size cam & groove couplings, the coupler is the first size in the part number. (i.e., a 4030-DA-AL is a 4" coupler to a 3" adapter)

Boss-Lock Type DA Jump Size Couplings

Coupler x Adapter

Features
- Nitrile rubber gasket standard, other gaskets available on pages 75-77
- All Boss-Lock couplers are supplied with pull-ring safety clips

Size	356T6 Aluminum Part #	316 Stainless Steel Part #
2" x 3"	ADA2030[1]	RDA2030BL[1]
2-1/2" x 2"	ADA2520[1]	---
2-1/2" x 3"	ADA2530[1]	---
3" x 2"	ADA3020	RDA3020BL
3" x 4"	ADA3040[1]	RDA3040BL[1]
4" x 2"	ADA4020[1]	RDA4020BL[1]
4" x 3"	ADA4030	RDA4030BL
6" x 4"	ADA6040[1]	---
8" x 6"	ADA8060[1, 2]	---

[1] Parts are produced as a welded fabrication
[2] The 8" coupler only interchanges with 8" Boss-Lock couplings.

NOTE: In jump size cam & groove couplings, the coupler is the first size in the part number. (i.e., a ADA4030 is a 4" coupler to a 3" adapter)

EZ Boss-Lock Type DA Jump Size Couplings

Coupler x Adapter

Feature
- Nitrile rubber gasket standard, other gaskets available on pages 75-77

Size	356T6 Aluminum Part #	316 Stainless Steel Part #
2" x 1"	---	RDA2010EZ[1]
2" x 3"	ADA2030EZ[1]	RDA2030EZ[1]
3" x 2"	ADA3020EZ	RDA3020EZ
3" x 4"	ADA3040EZ[1]	RDA3040EZ[1]
4" x 2"	ADA4020EZ[1]	RDA4020EZ[1]
4" x 3"	ADA4030EZ	RDA4030EZ
6" x 4"	ADA6040EZ[1]	RDA6040EZ

[1] Parts are produced as a welded fabrication

NOTE: In jump size cam & groove couplings, the coupler is the first size in the part number. (i.e., a ADA4030EZ is a 4" coupler to a 3" adapter)

Dixon® Type DA Jump Size Couplings with Port

Coupler x Adapter

Feature
- Nitrile rubber gasket standard, other gaskets available on pages 75-77

Size	Port	316 Stainless Steel Part #
3" x 2"	1/4"	3020DAT25SS
3" x 2"	3/8"	3020DAT38SS
3" x 2"	1/2"	3020DAT50SS
3" x 2"	3/4"	3020DAT75SS

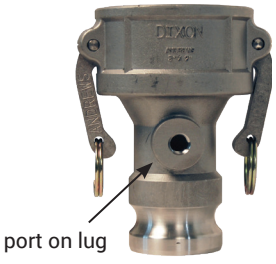

NOTE: In jump size cam & groove couplings, the coupler is the first size in the part number. (i.e., a ADA4030EZ is a 4" coupler to a 3" adapter)

Type AA Spool Adapters

Adapter x Adapter

Feature

- Pressure rating is based on the seal of the mating part, see ratings on page 3

increaser / reducer

same size

Size	356T6 Aluminum Part #	316 Stainless Steel Part #	Unplated Malleable Iron Part #
1"	---	100-AA-SS	---
1-1/4"	---	125-AA-SS[1]	---
1-1/2"	150-AA-AL	150-AA-SS	---
1-1/2" x 2"	1520-AA-AL	1520-AA-SS	---
2"	200-AA-AL	200-AA-SS	---
2" x 3"	2030-AA-AL	2030-AA-SS	---
2" x 4"	2040-AA-AL	2040-AA-SS[1]	---
2-1/2" x 3"	2530-AA-AL[1]	2530-AA-SS[1]	---
2-1/2" x 4"	2540-AA-AL[1]	---	---
3"	300-AA-AL	300-AA-SS	---
3" x 4"	3040-AA-AL	3040-AA-SS[1]	---
4"	400-AA-AL	400-AA-SS	400-AA-MI
4" x 5"	4050-AA-AL	---	---
4" x 6"	4060-AA-AL	4060-AA-SS[1]	---
5"	500-AA-AL[1]	500-AA-SS[1]	---
5" x 6"	5060-AA-AL[1]	---	---
6"	600-AA-AL	600-AA-SS[1]	---

[1] Parts are produced as a welded fabrication

Size	Brass Part #
2"	200-AA-BR
3"	300-AA-BR

Dixon® Type DD Couplers

Coupler x Coupler

Feature

- Nitrile rubber gasket standard, other gaskets available on pages 75-77

reducer / increaser

same size

Size	356T6 Aluminum Part #	316 Stainless Steel Part #
1-1/2"	---	150-DD-SS[1]
2"	200-DD-AL	200-DD-SS
2" x 3"	2030-DD-AL	2030-DD-SS
3"	300-DD-AL	300-DD-SS
3" x 4"	3040-DD-AL	3040-DD-SS[1]
4"	400-DD-AL	400-DD-SS
4" x 5"	4050-DD-AL[1]	4050-DD-SS[1]
4" x 6"	4060-DD-AL[1]	4060-DD-SS
5"	500-DD-AL[1]	500-DD-SS
6"	600-DD-AL	---

[1] Parts are produced as a welded fabrication

Boss-Lock Type DD Couplers

Coupler x Coupler

Features

- Nitrile rubber gasket standard, other gaskets available on pages 75-77
- All Boss-Lock couplers are supplied with pull-ring safety clips

reducer / increaser

same size

Size	356T6 Aluminum Part #	316 Stainless Steel Part #
2"	ADD200[1]	RDD200EZ
2" x 1"	---	RDD2010EZ[1]
2" x 3"	ADD2030[1]	RDD2030EZ[1]
3"	ADD300[1]	RDD300EZ[1]
3" x 4"	ADD3040[1]	RDD3040EZ[1]
4"	ADD400[1]	RDD400EZ[1]
6"	---	RDD600EZ[1]

[1] Parts are produced as a welded fabrication

Type A Jump Size Adapters

Adapter x Female NPT

Feature
- Pressure rating is based on the seal of the mating part, see ratings on page 3

Size	356T6 Aluminum Part #	Brass Part #	316 Stainless Steel Part #
2" x 1-1/2"	2015-A-AL	---	2015-A-SS[1]
2" x 3"	2030-A-AL	---	2030-A-SS
2-1/2" x 2"	---	2520-A-BR	---
3" x 2"	3020-A-AL	---	3020-A-SS
3" x 4"	3040-A-AL	---	---
4" x 3"	4030-A-AL	---	4030-A-SS[1]
4" x 6"	4060-A-AL	---	---
6" x 4"	6040-A-AL	---	6040-A-SS[1]

[1] Parts are produced as a welded fabrication

NOTE: In jump size couplings, the cam & groove end is the first size given in the part number. (i.e., a 4030-C-AL is a 4" coupler to a 3" hose shank).

Dixon® Type B Jump Size Couplers

Coupler x Male NPT

Feature
- Nitrile rubber gasket standard, other gaskets available on pages 75-77

Size	356T6 Aluminum Part #	316 Stainless Steel Part #
1-1/2" x 1"	1510-B-AL	1510-B-SS[1]
2" x 1-1/2"	2015-B-AL	2015-B-SS[1]
2" x 3"	2030-B-AL	---
3" x 2"	3020-B-AL	3020-B-SS[1]
3" x 4"	3040-B-AL	---
4" x 3"	4030-B-AL	4030-B-SS[1]

[1] Parts are produced as a welded fabrication

NOTE: In jump size couplings, the cam & groove end is the first size given in the part number. (i.e., a 4030-C-AL is a 4" coupler to a 3" hose shank).

Dixon Type C Jump Size Couplers

Coupler x Hose Shank

Feature
- Nitrile rubber gasket standard, other gaskets available on pages 75-77

Size	356T6 Aluminum Part #	316 Stainless Steel Part #
1-1/2" x 1"	---	1510-C-SS
2" x 1-1/2"	2015-C-AL[1]	2015-C-SS[1]
3" x 2"	3020-C-AL	3020-C-SS
3" x 2-1/2"	---	3025-C-SS
3" x 4"	3040-C-AL	---
4" x 3"	4030-C-AL	4030-C-SS[1]
5" x 4"	5040-C-AL[1]	---

[1] Parts are produced as a welded fabrication

NOTE: In jump size couplings, the cam & groove end is the first size given in the part number. (i.e., a 4030-C-AL is a 4" coupler to a 3" hose shank).

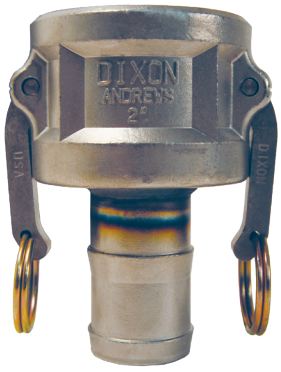

EZ Boss-Lock Type C Jump Size Coupler

New

Coupler x King Crimp® Hose Shank

Feature
- Nitrile rubber gasket standard, other gaskets available on pages 75-77

Size	316 Stainless Steel Part #
3" x 2-1/2"	RC3025EZCR

NOTE: In jump size couplings, the cam & groove end is the first size given in the part number. (i.e., a 4030-C-AL is a 4" coupler to a 3" hose shank).

Dixon® Type D Jump Size Couplers

Coupler x Female NPT

Feature

- Nitrile rubber gasket standard, other gaskets available on pages 75-77

Size	356T6 Aluminum Part #	Brass Part #	316 Stainless Steel Part #
1-1/2" x 1"	1510-D-AL	---	1510-D-SS[1]
2" x 1-1/2"	2015-D-AL	---	2015-D-SS
3" x 2"	3020-D-AL	---	3020-D-SS
4" x 3"	4030-D-AL	4030-D-BR	4030-D-SS[1]
5" x 4"	5040-D-AL[1]	---	---
6" x 4"	6040-D-AL[1]	---	---

[1] Parts are produced as a welded fabrication

NOTE: In jump size couplings, the cam & groove end is the first size given in the part number. (i.e., a 4030-C-AL is a 4" coupler to a 3" hose shank).

Type E Jump Size Adapters

Adapter x Hose Shank

Feature

- Pressure rating is based on the seal of the mating part, see ratings on page 3

Size	356T6 Aluminum Part #	316 Stainless Steel Part #
1-1/2" x 1"	---	1510-E-SS
2" x 1-1/2"	2015-E-AL[1]	2015-E-SS[1]
3" x 2"	---	3020-E-SS[1]
3" x 2-1/2"	---	3025-E-SS
4" x 3"	4030-E-AL	4030-E-SS[1]
5" x 4"	5040-E-AL[1]	---

[1] Parts are produced as a welded fabrication

NOTE: In jump size couplings, the cam & groove end is the first size given in the part number. (i.e., a 4030-B-AL is a 4" coupler to a 3" male NPT).

Type F Jump Size Adapters

Adapter x Male NPT

Feature

- Pressure rating is based on the seal of the mating part, see ratings on page 3

Size	356T6 Aluminum Part #	316 Stainless Steel Part #
1-1/2" x 2"	1520-F-AL	---
2" x 1-1/2"	2015-F-AL	2015-F-SS
2" x 3"	2030-F-AL	---
3" x 1-1/2"	3015-F-AL	3015-F-SS[1]
3" x 2"	3020-F-AL	3020-F-SS
3" x 4"	3040-F-AL	---
4" x 3"	4030-F-AL	4030-F-SS

[1] Parts are produced as a welded fabrication

NOTE: In jump size couplings, the cam & groove end is the first size given in the part number. (i.e., a 4030-C-AL is a 4" coupler to a 3" hose shank).

Dixon® Type DA 45° Elbows

Adapter x Coupler

Feature
- Nitrile rubber gasket standard, other gaskets available on pages 75-77

Size	356T6 Aluminum Part #	316 Stainless Steel Part #	Unplated Malleable Iron Part #
2"	200DA-45AL[1]	200DA-45SS[1]	---
3"	300DA-45AL	300DA-45SS[1]	---
4"	400DA-45AL	400DA-45SS[1]	400DA-45MI
6"	600DA-45AL	---	---

[1] Part is produced as a welded fabrication

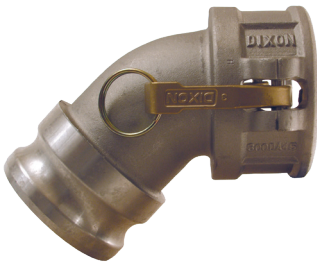

Dixon Type DD 45° Elbows

Coupler x Coupler

Feature
- Nitrile rubber gasket standard, other gaskets available on pages 75-77

Size	356T6 Aluminum Part #	316 Stainless Steel Part #
2"	200DD-45AL[1]	---
3"	300DD-45AL[1]	300DD-45SS[1]
4"	400DD-45AL	---
6"	600DD-45AL[1]	---

[1] Part is produced as a welded fabrication

Dixon Type DA 90° Elbows

Adapter x Coupler

Feature
- Nitrile rubber gasket standard, other gaskets available on pages 75-77

Size	356T6 Aluminum Part #	316 Stainless Steel Part #
1"	---	100DA-90SS[1]
1-1/2"	150DA-90AL[1]	150DA-90SS[1]
2"	200DA-90AL	200DA-90SS
3"	300DA-90AL	300DA-90SS
4"	400DA-90AL	400DA-90SS
5"	500DA-90AL[1]	---
6"	600DA-90AL	RDA90600EZ[1, 2]

[1] Part is produced as a welded fabrication
[2] EZ Boss-Lock design (not pictured)

Dixon Type DD 90° Elbows

Coupler x Coupler

Feature
- Nitrile rubber gasket standard, other gaskets available on pages 75-77

Size	356T6 Aluminum Part #	316 Stainless Steel Part #
2"	200DD-90AL	---
3"	300DD-90AL	300DD-90SS[1]
4"	400DD-90AL	---
6"	600DD-90AL	---

[1] Part is produced as a welded fabrication

Type A 90° Elbows

Adapter x Female NPT

Feature
- Pressure rating is based on the seal of the mating part, see ratings on page 75-77

Size	356T6 Aluminum Part #	316 Stainless Steel Part #
1-1/2"	150A-90AL	---
2"	200A-90AL	200A-90SS[1]
3"	300A-90AL	300A-90SS
4"	400A-90AL	---

[1] Part is produced as a welded fabrication

Dixon® Type B 90° Elbows

Coupler x Male NPT

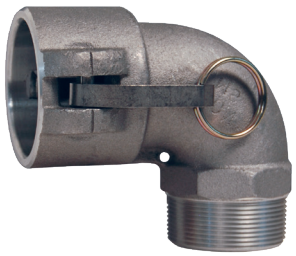

Feature
- Nitrile rubber gasket standard, other gaskets available on pages 75-77

Size	356T6 Aluminum Part #	316 Stainless Steel Part #
1-1/2"	150B-90AL	---
2"	200B-90AL	200B-90SS [1]
3"	---	300B-90SS [1]

[1] Parts are produced as a welded fabrication.

Dixon Type C 90° Elbows

Coupler x Hose Shank

Feature
- Nitrile rubber gasket standard, other gaskets available on pages 75-77

Size	356T6 Aluminum Part #	Brass Part #	316 Stainless Steel Part #
1-1/4"	---	125C-90BR	---
1-1/2"	150C-90AL	---	150C-90SS
2"	200C-90AL	200C-90BR	200C-90SS
3"	300C-90AL	---	300C-90SS
4"	400C-90AL	---	400C-90SS[1]
6"	600C-90AL	---	---

[1] Part is produced as a welded fabrication

Dixon Type D 90° Elbows

Coupler x Female NPT

EZ Boss-Lock design

Feature
- Nitrile rubber gasket standard, other gaskets available on pages 75-77

Size	356T6 Aluminum Part #	Brass Part #	316 Stainless Steel Part #
1"	---	---	100D-90SS
1-1/4"	---	125D-90BR	---
1-1/2"	150D-90AL	150D-90BR	---
2"	200D-90AL	200D-90BR	200D-90SS
2"	---	BD90200EZ[2]	---
3"	300D-90AL	---	300D-90SS
4"	400D-90AL	---	400D-90SS[1]
4"	AD90400EZ[2]	---	---
6"	600D-90AL	---	---

[1] Part is produced as a welded fabrication
[2] EZ Boss-Lock design

Type E 90° Elbows

Adapter x Hose Shank

Feature
- Pressure rating is based on the seal of the mating part, see ratings on page 3

Size	356T6 Aluminum Part #	316 Stainless Steel Part #
2"	---	200E-90SS[1]
3"	300E-90AL	300E-90SS
4"	400E-90AL	400E-90SS[1]

[1] Parts are produced as a welded fabrication

Type F 90° Elbows

Adapter x Male NPT

Feature
- Pressure rating is based on the seal of the mating part, see ratings on page 3

Size	356T6 Aluminum Part #	316 Stainless Steel Part #
1-1/2"	150F-90AL	---
2"	200F90AL	200F-90SS[1]
3"	---	300F-90SS[1]

[1] Parts are produced as a welded fabrication

Type F 15° Elbows

Adapter x Male NPT

Feature
- Pressure rating is based on the seal of the mating part, see ratings on page 3

Size	316 Stainless Steel Part #
2"	200F-15SS

Adapter x 150# Flange

Features
- Aluminum and unplated iron flanges are flat face
- Stainless steel flanges are raised face
- Reference dixonvalve.com for flange bolt hole drilling circle standards
- Flanges are designed to mate with 150# flanges
- Flanges have the same bolt hole pattern as an ANSI 150 lb. flange, the thickness may vary

Size	356T6 Aluminum Part #	Flange Thick.	Unplated Malleable Iron Part #	Flange Thick.	316 Stainless Steel Part #	Flange Thick.
1"	---	---	---	---	100-AL-SS	9/16"
1-1/2"	---	---	---	---	150-AL-SS	11/16"
2"	200-AL-AL	3/4"	---	---	200-AL-SS	7/16"
3"	300-AL-AL	5/8"	300-AL-MI	5/8"	300-AL-SS	7/16"
4"	400-AL-AL	5/8"	---	---	400-AL-SS	7/16"
6"	600-AL-AL	5/8"	---	---	600-AL-SS	5/8"
8"	800-AL-AL[1]	1-1/8"	---	---	---	---

[1] Part is produced as a welded fabrication

NOTE: For flange dimensions, diagrams, and additional information, please reference dixonvalve.com.

Adapter x 150# ANSI Flange

Feature
- Global product made to Dixon® specifications

Size	316 Stainless Steel Part #	Flange Thickness
2"	200-AL-SSANSI	3/4"
3"	300-AL-SSANSI	15/16"

NOTE: For flange dimensions, diagrams, and additional information, please reference dixonvalve.com.

Dixon Coupler x 150# Flange

Feature
- Nitrile rubber gasket standard, other gaskets available on pages 75-77

Size	356T6 Aluminum Part #	Flange Thick	316 Stainless Steel Part #	Flange Thick.
1"	---	---	100-DL-SS	21/32"
1-1/2"	---	---	150-DL-SS	25/32"
2"	200-DL-AL	3/4"	200-DL-SS	7/16"
3"	300-DL-AL	15/16"	300-DL-SS	7/16"
4"	400-DL-AL	15/16"	400-DL-SS	7/16"
6"	600-DL-AL	1"	600-DL-SS	5/8"
8"	800-DL-AL[1]	1-1/8"	---	---

[1] Part is produced as a welded fabrication

NOTE: For flange dimensions, diagrams, and additional information, please reference dixonvalve.com.

EZ Boss-Lock Coupler x 150# Flange

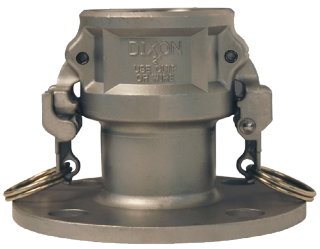

Feature
- Nitrile rubber gasket standard, other gaskets available on pages 75-77

Size	316 Stainless Steel Part #	Flange Thickness
1"	RDL100EZ[1]	9/16"
1-1/2"	RDL150EZ[1]	11/16"
2"	RDL200EZ	7/16"
3"	RDL300EZ[1]	7/16"
4"	RDL400EZ[1]	7/16"
6"	RDL600EZ[1]	1"

[1] Parts are produced as a welded fabrication

NOTE: For flange dimensions, diagrams, and additional information, please reference dixonvalve.com.

Dixon® Coupler Socket Weld to Schedule 40 Pipe

Features
- Not all configurations are stocked
- Boss-Lock versions are also available; consult Dixon for pricing and availability
- CAD models are for reference only; consult Dixon for specific dimensions
- Final weld preparation, as with all weld fittings, is the responsibility of the welder
- Nitrile rubber gasket standard, other gaskets available on pages 75-77

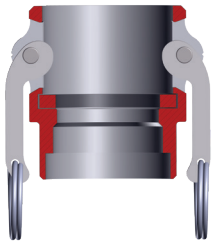

Size	Bore	356T6 Aluminum Part #	316 Stainless Steel Part #
3/4"	1.065	---	75DWSPSS
1"	1.330	100DWSPAL	100DWSPSS
1-1/2"	1.915	150DWSPAL	150DWSPSS
2"	2.390	200DWSPAL	200DWSPSS
3"	3.530	300DWSPAL	300DWSPSS
4"	4.530	400DWSPAL	400DWSPSS
5"	5.562	500DWSPAL	500DWSPSS
6"	6.655	600DWSPAL	600DWSPSS
8"	8.711	800DWSPAL[1]	---

[1] Dixon and Boss-Lock cam & groove couplings do not interchange in the 8" *size* The 8" Dixon design has 4 cam arms.

Dixon Coupler Butt Weld to Schedule 40 Pipe/Socket Weld to Nominal Tubing

Feature
- Nitrile rubber gasket standard, other gaskets available on pages 75-77

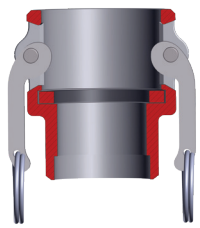

Size	Bore	356T6 Aluminum Part #	316 Stainless Steel Part #
3/4"	.765	---	75DWBPSTSS
1"	1.015	---	100DWBPSTSS
1-1/2"	1.515	150DWBPSTAL	150DWBPSTSS
2"	2.015	200DWBPSTAL	200DWBPSTSS
3"	3.015	300DWBPSTAL	300DWBPSTSS
4"	4.015	400DWBPSTAL	400DWBPSTSS
5"	5.015	500DWBPSTAL	---
6"	6.020	600DWBPSTAL	---

EZ Boss-Lock Coupler Socket Weld to Schedule 40 Pipe

Feature
- Nitrile rubber gasket standard, other gaskets available on pages 75-77

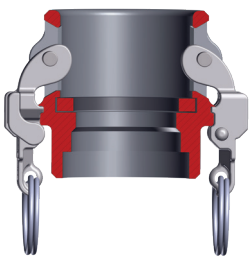

Size	Bore	316 Stainless Steel Part #
3/4"	1.065	RDWSP075EZ
1"	1.330	RDWSP100EZ
1-1/2"	1.915	RDWSP150EZ
2"	2.390	RDWSP200EZ
3"	3.530	RDWSP300EZ
4"	4.530	RDWSP400EZ
6"	6.655	RDWSP600EZ

EZ Boss-Lock Coupler Butt Weld to Schedule 40 Pipe / Socket Weld to Nominal Tubing

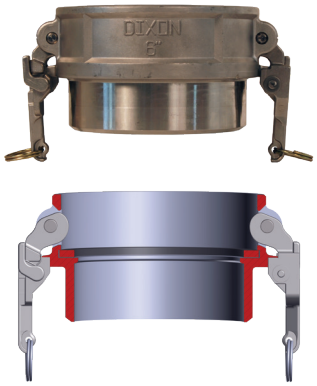

Feature
- Nitrile rubber gaskets standard, other gaskets available on pages 75-77

Size	Bore	316 Stainless Steel Part #
3/4"	.765	RDWBPST075EZ
1"	1.015	RDWBPST100EZ
1-1/2"	1.515	RDWBPST150EZ
2"	2.015	RDWBPST200EZ
3"	3.015	RDWBPST300EZ
4"	4.015	RDWBPST400EZ
6"	6.020	RDWBPST600EZ

Adapter Socket Weld to Schedule 40 Pipe

Feature
- Not all configurations are stocked

Size	Bore	356T6 Aluminum Part #	316 Stainless Steel Part #
3/4"	1.065	---	75AWSPSS
1"	1.330	---	100AWSPSS
1-1/2"	1.915	150AWSPAL	150AWSPSS
2"	2.390	200AWSPAL	200AWSPSS
3"	3.530	300AWSPAL	300AWSPSS
4"	4.530	400AWSPAL	400AWSPSS
5"	5.593	500AWSPAL	500AWSPSS
6"	6.655	600AWSPAL	600AWSPSS
8" DIX	8.711	800AWSPAL[1]	---
8" BL	8.711	801AWSPAL[1]	---

[1] Dixon® and Boss-Lock cam & groove couplings do not interchange in the 8" size.
NOTE: Final weld preparation, as with all weld fittings, is the responsibility of the welder.

Adapter Butt Weld to Schedule 40 Pipe/Socket Weld to Nominal Tubing

Size	Bore	356T6 Aluminum Part #	316 Stainless Steel Part #
3/4"	.765	---	75AWBPSTSS
1"	1.015	---	100AWBPSTSS
1-1/2"	1.515	150AWBPSTAL	150AWBPSTSS
2"	2.015	200AWBPSTAL	200AWBPSTSS
3"	3.015	300AWBPSTAL	300AWBPSTSS
4"	4.015	400AWBPSTAL	400AWBPSTSS
5"	5.015	500AWBPSTAL	500AWBPSTSS
6"	6.020	600AWBPSTAL	600AWBPSTSS
8" BL	8.035	801AWBPSTAL[1]	---

[1] Dixon and Boss-Lock cam & groove couplings do not interchange in the 8" size

Dixon Weld to Tube Cam and Groove

Features
- Designed to be welded to standard sanitary tubing
- 316 stainless steel investment casting

Adapter x Weld to Tube End

Size	316 Stainless Steel Part #
1"	RE100BT
1-1/2"	RE150BT
2"	RE200BT
3"	RE300BT

Boss-Lock® Coupler x Weld to Tube End

Feature
- Nitrile rubber gaskets are standard, other gaskets available on pages 75-77

Size	316 Stainless Steel Part #
1"	RC100BT
1-1/2"	RC150BT
2"	RC200BT
3"	RC300BT

Cam and Groove Transition Fittings

Adapter x Clamp End

Size	316 Stainless Steel Part #
1-1/2"	RE150SE
2"	RE200SE
3"	RE300SE

Boss-Lock Coupler x Clamp End

Feature
- Nitrile rubber gaskets are standard, other gaskets available on pages 75-77

Size	316 Stainless Steel Part #
1-1/2"	RC150SE
2"	RC200SE
3"	RC300SE

Adapter x Female NPSM

Application
- Used in the delivery of dry goods

Features
- Cork nitrile rubber gaskets are standard in threaded end
- Pressure rating is based on the seal of the mating part, see ratings on page 3
- Replacement gasket; 400GAGFI

Size	356T6 Aluminum Part #
4"	400-AS-AL

Boss-Lock Coupler x Female NPSM

Features
- Nitrile rubber gasket standard, other gaskets available on pages 75-77
- All Boss-Lock couplers are supplied with pull-ring safety clips

Size	356T6 Aluminum Part #
4"	ADS400

Dixon® Coupler x Adapter Wye

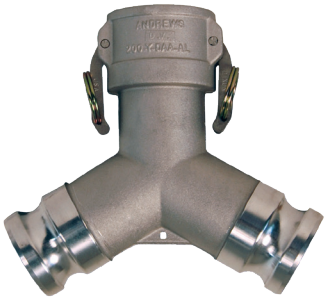

Feature
- Nitrile rubber gasket standard, other gaskets available on pages 75-77

Size	356T6 Aluminum Part #
2"	200YDAAAL
4"	400YDAAAL[1]

[1] Part is produced as a welded fabrication.

Cam & Groove Hydrant Adapters

Features
- Pin lugs allow for easy connection using standard spanner and hydrant wrenches
- Supplied with a nitrile rubber washer in the threaded end

Female NST (NH) Thread	Male Adapter	Brass Part #	Aluminum Part #
1-1/2"	1-1/2"	HA1515ADP	AHA1515ADP
2-1/2"	2-1/2"	HA2525ADP	AHA2525ADP

Replacement Washers

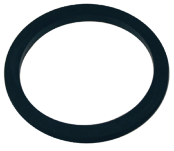

I.D.	O.D.	Thickness	Nitrile Rubber Part #
1-9/16"	2-1/16"	1/8"	SW150
2-9/16"	3-3/16"	3/16"	SW250

NOTE: All adapters are made to approved Dixon specifications.

Boss-Lock Coupler x Tube with 45° Cut

Application
- For use on trailer relief valves

Features
- Butt weld to tubing
- Nitrile rubber gaskets standard, other gaskets available on pages 75-77
- All Boss-Lock couplers are supplied with pull-ring safety clips

Size	356T6 Aluminum Part #
2"	AC200TUBE

In-Line Sight Glasses

Application
- Designed for dry bulk transfer hose

Feature
- Not intended for liquid service. For dry bulk transfer *only.*

Materials
- Body: aluminum
- Seals: nitrile rubber
- Sight glass: acrylic
- Hardware: stainless steel
- Cam arms (where applicable): bronze

Coupler x Adapter

Size	Aluminum Part #
3" x 3"	3533CA
3" x 4"	3534CA
4" x 3"	3543CA
4" x 4"	3544CA

Adapter x Adapter

Size	Aluminum Part #
3" x 3"	3533AA
3" x 4"	3534AA
4" x 4"	3544AA

Coupler x Coupler

Size	Aluminum Part #
3" x 3"	3533CC
4" x 3"	3543CC
4" x 4"	3544CC

Dixon® Cam & Groove Handles

Features
- Pull rings are standard on sizes 1-1/4" thru 6", optional on other sizes
- Domestic Dixon standard handle assemblies are only to be used with standard Dixon parts (not global), handles do not interchange with other manufacturers' handles or couplers

Materials
- Stainless steel pins standard with all assemblies
- Solid pins are 303 stainless
- Trivalent chrome plated steel pull ring

brass

316 sintered stainless steel

316 investment stainless steel

Coupler Size	Description	Brass Part #	316 Sintered Stainless Steel Part #
1/2"	cam arm and pin	---	50-HP-SP
3/4"	cam arm and pin	---	75-HP-SP
1"	cam arm and pin	---	100-HP-SP
1-1/4" - 2-1/2"	cam arm, ring, and pin	200-HRP-BR	200-HRP-SP
3" - 5"	cam arm, ring, and pin	300-HRP-BR	300-HRP-SP
6"	cam arm, ring, and pin	600-HRP-BR	---
8"	cam arm and pin	800-HNP-BR	---

Coupler Size	Description	316 Investment Stainless Steel Part #
2"	cam arm, ring, and pin	200-HSCRP-SI
3"	cam arm, ring, and pin	300-HSCRP-SI
6"	cam arm, ring, and pin	600-HRP-SI

Dixon Cam & Groove Locking Handles for Dust Caps

200-LH-SI

300-LH-BR

Features
- Dixon locking handles are only to be used with standard Dixon parts (not global), handles do not interchange with other manufacturers' handles or couplers
- Not supplied with pins

Coupler Size	Hole Diameter	Brass Part #	316 Investment Stainless Steel Part #
2"	9/32"	200-LH-BR	200-LH-SI
3"	5/16"	300-LH-BR	300-LH-SI
4"	3/8"	400-LH-BR	400-LH-SI

Boss-Lock Cam & Groove Handles

IHSC152

IH6

Features
- Boss-Lock handles should only be used with Boss-Lock parts, handles do not interchange with other manufacturers' handles or couplers
- Trivalent chrome plated steel pull ring
- Stainless steel pins are standard with all assemblies
- Solid pins are 303 stainless steel

Coupler Size	Brass Part #	316 Investment Stainless Steel Part #	Plated Iron Part #
3/4" - 1"	BHSC175	RHSC175	---
1-1/4" - 2-1/2"	BHSC152	RHSC152	IHSC152
3" and 4"	BHSC34	RHSC34	IHSC34

Coupler Size	Brass Part #	Plated Iron Part #
6" and 8"	BH6	IH6

EZ Boss-Lock Cam & Groove Handles

Materials
- Investment cast stainless steel cam arm and lever
- 316 stainless steel spring
- 303 stainless steel pin, washer; Trivalent chrome plated steel pull ring

Coupler Size	Investment Cast Stainless Steel Part #
3/4" - 1"	RHEZ175
1-1/4" - 2-1/2"	RHEZ152
3" - 5"	RHEZ34
6" and 8"	RHEZ6

EZ Boss-Lock Cam & Groove Paddle Handle

Materials
- Investment cast stainless steel cam arm and lever
- 316 stainless steel spring
- 303 stainless steel pin, washer

Coupler Size	Investment Cast Stainless Steel Part #
3" - 5"	RHEZ34PAD
6" and 8"	RHEZ8PAD

Under no circumstances should the EZ Boss-Lock cam arms be used on any fitting not specifically produced for their use. The aluminum, brass, and iron are made from sand castings. To ensure proper functioning of the EZ Boss-Lock cam arm assemblies, we sort the castings to ensure there is sufficient length and orientation on the lugs on the main casting to engage the lever. We also buff or grind the rougher sand cast surface to ensure that the lever will move freely. The EZ Boss-Lock cam arms cannot be retrofitted onto existing aluminum, brass, or plated iron Boss-Lock already in service.

Dixon® Coupling Paddle Handles

Features
- Dixon paddle handles are only to be used with standard Dixon parts (not global), handles do not interchange with other manufacturers' handles or couplers
- Not supplied with pins

316 investment cast stainless steel

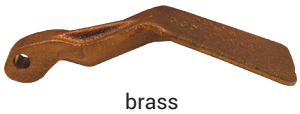

brass

Coupler Size	Brass Part #	316 Investment Cast Stainless Steel Part #
3" and 4"	300H-PADBR	300H-PADSS

Cam & Groove Gasket Dimensions

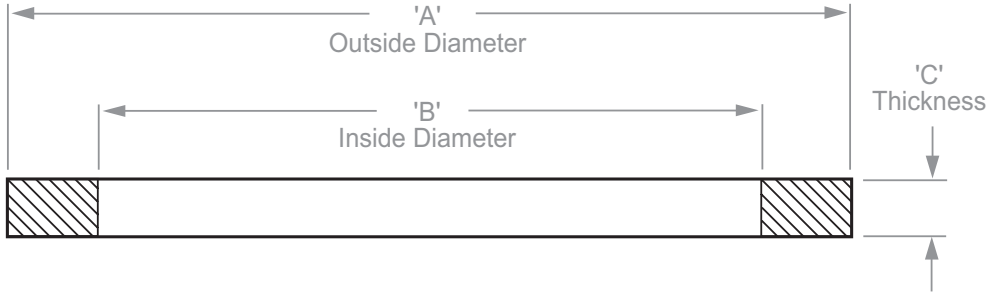

Features

- Nominal dimensions for elastomeric cam & groove gaskets are listed
- I.D.s of the PTFE envelope gaskets and the PTFE accordion gaskets are 1/16" smaller than the I.D.s for the elastomeric gaskets shown below
- Thickness of PTFE accordion gaskets may vary from chart below

Size	Part #	Dimensions		
		A	B	C
1/2"	50-G [1]	1-1/32"	11/16"	.156"
3/4"	75-G	1-3/8"	7/8"	.218"
1"	100-G	1-9/16"	1-1/16"	.250"
1-1/4"	125-G	1-15/16"	1-23/64"	.250"
1-1/2"	150-G	2-3/16"	1-5/8"	.250"
2"	200-G	2-5/8"	2"	.250"
2-1/2"	250-G	3-1/8"	2-3/8"	.250"
3"	300-G	3-23/32"	3"	.250"
4"	400-G	4-7/8"	4"	.250"
5"	500-G [1]	5-15/16"	4-7/8"	.250"
6"	600-G	7-1/16"	6"	.250"
8"	800-G [1]	9-5/16"	8-1/8"	.343"

[1] No interchange standard exists for the 1/2", 5", and 8" fittings. Generally, these sizes do not interchange with other manufacturers' products. As such, the gaskets in these sizes are not suitable for use in other manufacturers' couplings.

Cam & Groove Gasket Color Codes

Gasket Code [1]	Material	Color	Color code stripes (appear on the O.D. of the gasket or filler)
-BU	Nitrile rubber (standard in all metal fittings)	black	1 blue
-BF	Nitrile rubber (formulated for fuel service)	black	1 green
-VI	FKM-A	green	none
-VIA	FKM-A	black	1 yellow
-THK	Extra thick nitrile rubber	black	2 blue
-EPR	Ethylene Propylene	black	1 white
-NE	Neoprene	black	1 red
-WNE	White Neoprene, FDA approved material	white	none
-WB	White nitrile rubber, FDA approved material	white	blue
-SIL	Silicone	red	none
-TF	PTFE (TFE) envelope with nitrile rubber filler	white / black	1 blue
TFVI	PTFE (TFE) envelope with FKM-A filler	white / black	1 yellow
TFWB	PTFE (TFE) envelope with white nitrile rubber filler, FDA approved materials	white / white	blue
TFEP	PTFE (TFE) envelope with Ethylene Propylene filler	white / black	1 white stripe
-TES	PTFE (FEP) encapsulated Silicone core, FDA approved materials	translucent / red	none
-TEV	PTFE (FEP) encapsulated FKM-A core	translucent / black	none
TFACC	PTFE (TFE) accordion, FDA approved materials	white	none

[1] Part number suffix

NOTE: Since other manufacturers' coding systems vary, this chart should not be used as a reference in identifying gaskets of unknown origin.

Cam & Groove Gaskets

Size	Nitrile Rubber Part #	Green FKM-A Part #	Black FKM-A Part #
1/2"	50-G-BU	50-G-VI	50-G-VIA
3/4"	75-G-BU	75-G-VI	75-G-VIA
1"	100-G-BU	100-G-VI	100-G-VIA
1-1/4"	125-G-BU	125-G-VI	125-G-VIA
1-1/2"	150-G-BU	150-G-VI	150-G-VIA
2"	200-G-BU	200-G-VI	200-G-VIA
2-1/2"	250-G-BU	250-G-VI	250-G-VIA
3"	300-G-BU	300-G-VI	300-G-VIA
4"	400-G-BU	400-G-VI	400-G-VIA
5"	500-G-BU	500-G-VI	500-G-VIA
6"	600-G-BU	600-G-VI	600-G-VIA
8"	800-G-BU	800-G-VI	800-G-VIA

nitrile rubber

FKM

FKM-A

Size	Extra Thick Nitrile Rubber Part #	Ethylene Propylene Part #
3/4"	---	75-G-EPR
1"	100GTHK	100-G-EPR
1-1/4"	125GTHK	125-G-EPR
1-1/2"	150GTHK	150-G-EPR
2"	200GTHK	200-G-EPR
2-1/2"	250GTHK	250-G-EPR
3"	300GTHK	300-G-EPR
4"	400GTHK	400-G-EPR
6"	600GTHK	---

extra thick nitrile rubber

ethylene propylene

Size	Neoprene Part #	Extra Thick Neoprene Part #	White Neoprene[1] Part #
3/4"	75-G-NE	---	---
1"	100-G-NE	---	---
1-1/4"	125-G-NE	---	---
1-1/2"	150-G-NE	---	150-G-WNE
2"	200-G-NE	200-G-NETHK	200-G-WNE
2-1/2"	250-G-NE	---	---
3"	300-G-NE	---	300-G-WNE
4"	400-G-NE	---	400-G-WNE
5"	---	---	500-G-WNE
6"	---	---	600-G-WNE

[1] White neoprene gaskets contain FDA approved materials

neoprene

white neoprene

Size	White Nitrile Rubber[1] Part #	Silicone Part #
1"	---	100-G-SIL
1-1/2"	---	150-G-SIL
2"	200-G-WB	200-G-SIL
2-1/2"	---	250-G-SIL
3"	300-G-WB	300-G-SIL
4"	400-G-WB	400-G-SIL
5"	500-G-WB	---

[1] White nitrile rubber gaskets contain FDA approved materials

white nitrile rubber

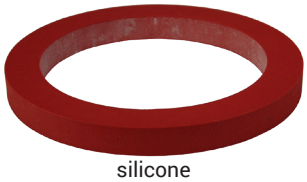

silicone

Fuel Gaskets

Size	Material	Part #
1-1/2"	nitrile rubber	150-G-BF
2"	nitrile rubber	200-G-BF
3"	nitrile rubber	300-G-BF
4"	nitrile rubber	400-G-BF
3"	extra thick nitrile rubber	300GTHKBF
4"	extra thick nitrile rubber	400GTHKBF

Cam & Groove Envelope Gaskets

Feature

- Maximum operating temperatures for specific chemicals may be lower; contact Dixon® for specific recommendations

Approval

- PTFE white nitrile rubber filler (TFWB) contains FDA approved materials

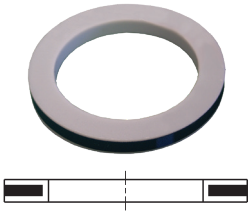

envelope

Size	PTFE (TFE) with Nitrile Rubber filler Part #	PTFE (TFE) with FKM-A filler Part #
1/2"	50-G-TF	50-G-TF-VI
3/4"	75-G-TF	75-G-TF-VI
1"	100-G-TF	100GTFVI
1-1/4"	125-G-TF	125GTFVI
1-1/2"	150-G-TF	150GTFVI
2"	200-G-TF	200GTFVI
2-1/2"	250-G-TF	250GTFVI
3"	300-G-TF	300GTFVI
4"	400-G-TF	400GTFVI
6"	600-G-TF	600GTFVI

Size	PTFE (TFE) with white Nitrile Rubber filler Part #	PTFE (TFE) with Ethylene Propylene filler Part #
1-1/2"	---	150GTFEP
2"	200GTFWB	200GTFEP
3"	300GTFWB	300GTFEP
4"	400GTFWB	---
5"	500GTFWB	---

NOTE: The torque (force) required to close the handles on a pair of cam & groove fittings will vary according to the gasket chosen. Due to the nature of the PTFE material, the various PTFE gasket designs will require the most torque, increasing as you go from envelope to encapsulated, and finally, accordion.

Cam & Groove Encapsulated Gaskets

Specifications

- Encapsulated gasket pressure ratings are reduced to **125 PSI** for 3/4" - 4" at ambient temperature **70°F (21°C)**
- PTFE encapsulated FKM-A (TEV) gaskets - maximum operating temperature **200°F (93°C)**
- PTFE encapsulated silicone (TES) gaskets - maximum operating temperature **225°F (107°C)**
- Maximum operating temperatures for specific chemicals may be lower; contact Dixon® for specific recommendations

Approval

- PTFE encapsulated silicone (TES) gaskets contain FDA approved materials

encapsulated

Size	PTFE (FEP) Encapsulated Silicone Part #	PTFE (FEP) Encapsulated FKM-A Part #
1/2"	50-G-TES	---
3/4"	75-G-TES	75-G-TEV
1"	100-G-TES	100-G-TEV
1-1/4"	125-G-TES	125-G-TEV
1-1/2"	150-G-TES	150-G-TEV
2"	200-G-TES	200-G-TEV
2-1/2"	250-G-TES	250-G-TEV
3"	300-G-TES	300-G-TEV
4"	400-G-TES	400-G-TEV

Cam & Groove Accordion Gaskets

Features

- PTFE accordion gaskets (TFACC) are recommended for use with viscous (thick) fluids only
- Maximum operating temperatures for specific chemicals may be lower; contact Dixon for specific recommendations

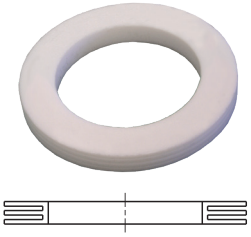

accordion

Size	PTFE (TFE) Part #
3/4"	75GTFACC
1"	100GTFACC
1-1/4"	125GTFACC
1-1/2"	150GTFACC
2"	200GTFACC
3"	300GTFACC

NOTE: The torque (force) required to close the handles on a pair of cam & groove fittings will vary according to the gasket chosen. Due to the nature of the PTFE material, the various PTFE gasket designs will require the most torque, increasing as you go from envelope to encapsulated, and finally, accordion.

Witches Hat Strainers

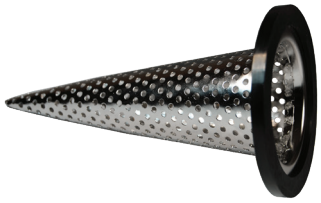

Features
- Used with female cam & groove couplings
- Pre-attached nitrile rubber gasket

Size	304 Stainless Steel Part #
3"	WH300-A
4"	WH400-A

Gaskets for Witches Hat Strainers

Size	Nitrile Rubber Gasket Part #
3"	WH300-G
4"	WH400-G

Disk Strainers

Feature
- Threads into bottom of female NPT fitting to protect equipment from large contaminants

Size	Hole Size	6061T6 Aluminum Part #	304 Investment Cast Stainless Steel Part #
1"	1/4"	---	SDS100
1-1/2"		---	SDS150
2"		SDA200	SDS200
3"		SDA300	SDS300
4"		SDA400	SDS400

Pull Ring Safety Clips for Boss-Lock

Coupler Size	Carbon Steel Part #	316 Stainless Steel Part #
3/4" - 1"	---	100PRSCSS
1-1/4" - 2-1/2"	200PRSCCS	200PRSCSS
3" and 4"	300PRSCCS	300PRSCSS

Pull Rings

304 Stainless Steel Part #
R200SS

Sash Chain with Pull Rings

Materials
- Brass chain, plated steel pull ring

Length	Part #
4-1/2"	J125
6-1/2"	J150
8-1/2"	J300
12-3/4"	J500

Abrasion Resistant Inserts

Features
- Extends the life of adapters when transferring proppant to storage tanks
- Available for multiple adapters and multiple coupler materials

Description	UHMW Polyethylene Part #
to be used with 400-A-AL, 400-A-BR, 400-A-MI, 400-A-SS	400-A-INSERT
to be used with 400-C-AL	400-C-INSERTAL
to be used with 400-C-MI	400-C-INSERTMI

400-A-INSERT

400-C-INSERTAL

Clip for Boss-Lock Couplings

Feature
- .072 stainless steel wire

Stainless Steel Part #
AC7

Clip Assembly

Features
- For use with Boss-Lock couplings
- Includes pull ring, chain, and AC3 clip

Carbon Steel Part #
BLCA152CS

Jack Chain with S-Hook

Length	Material	Part #	Optional Qty
6"	brass	CH-B-6	10
12"	brass	CH-B-12	10
24"	brass	CH-B-24	---
12"	carbon steel	CH-C-12	10
6"	stainless	CH-SS-6	10
12"	stainless	CH-SS-12	10
24"	stainless	CH-SS-24	10

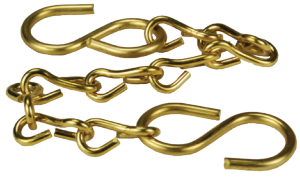

Locking Cam Arm Velcro® Straps

Application
- Use with cam & groove couplers to prevent spills, secure from damage, and hold in place during transport

Features
- Used on the female end of a cam & groove coupler
- High visibility orange hook and loop with metal buckle provides strength, durability, and long life

Specification
- Temperature range: **-70°F to 200°F (-57°C** to **93°C)**

Length	Used On	Part #
12"	fits up to 1-1/2" coupler	CVS12
18"	fits up to 3" coupler	CVS18
24"	fits up to 5" coupler	CVS24
36"	fits up to 8" coupler	CVS36

coupler sold separately

Lanyards with Clip for Boss-Lock Couplings

ACL2

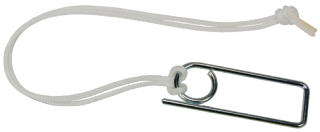

ACL3

Materials
- Clip: carbon steel
- Lanyard: nylon

Coupler Size	Part #
3/4" - 1"	ACL4
1-1/4" - 4"	ACL2
6"	ACL3

PVC Coated Lanyards

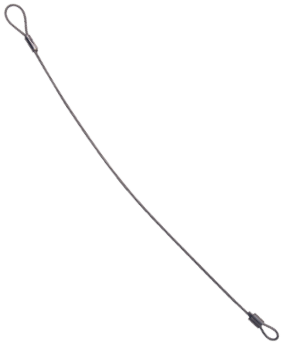

Feature
- One end factory crimped, one end uncrimped for field installation

Material
- PVC coated carbon steel with aluminum crimp sleeves

Length	Part #
15"	CAL15
25"	CAL25

Lanyard for Boss-Lock Couplings

Feature
- Breaking strength: 160 lbs.

Overall Length	304 Stainless Part #
7"	LR7

Global Type A Adapters

Adapter x Female NPT

Features

- Interchanges with all products produced to A-A-59326D
- Pressure rating for adapters is based on the seal of the mating part

Size	A380 Permanent Mold Aluminum Part #	ASTM C38000 Forged Brass Part #
1/2"	G50-A-AL[1]	G50-A-BR[1]
3/4"	G75-A-AL	G75-A-BR
1"	G100-A-AL	G100-A-BR
1-1/4"	G125-A-AL	G125-A-BR
1-1/2"	G150-A-AL	G150-A-BR
2"	G200-A-AL	G200-A-BR
2-1/2"	G250-A-AL	G250-A-BR
3"	G300-A-AL	G300-A-BR
4"	G400-A-AL	G400-A-BR
5"	G500-A-AL[1]	G500-A-BR[1]
6"	G600-A-AL	---
8"	G800-A-AL[1]	---

Size	316 Investment Cast Stainless Steel Part #
1/2"	G50-A-SS[1]
3/4"	G75-A-SS
1"	G100-A-SS
1-1/4"	G125-A-SS
1-1/2"	G150-A-SS
2"	G200-A-SS
2-1/2"	G250-A-SS
3"	G300-A-SS
4"	G400-A-SS
6"	G600-A-SS

[1] No standard exists for the 1/2", 5", and 8", and generally these sizes do not interchange with other manufacturers' products.

ASTMC38000 forged brass

Global Type B Couplers

Coupler x Male NPT

Features

- Interchanges with all products produced to A-A-59326D
- Nitrile rubber seals standard, other gaskets available on pages 75-77

A380 permanent mold aluminum

Size	A380 Permanent Mold A with Brass Handles Part #	ASTM C38000 Forged Brass Part #
1/2"	G50-B-AL[1, 2]	G50-B-BR[1, 2]
3/4"	G75-B-AL[2]	G75-B-BR[2]
1"	G100-B-AL[2]	G100-B-BR[2]
1-1/4"	G125-B-AL	G125-B-BR
1-1/2"	G150-B-AL	G150-B-BR
2"	G200-B-AL	G200-B-BR
2-1/2"	G250-B-AL	G250-B-BR
3"	G300-B-AL	G300-B-BR
4"	G400-B-AL	G400-B-BR
5"	G500-B-AL[1]	G500-B-BR[1]
6"	G600-B-AL	---

Size	316 Investment Cast Stainless Steel Part #	A380 Permanent Mold Aluminum with Investment Stainless Handles Part #
1/2"	G50-B-SS[1]	---
3/4"	G75-B-SS	---
1"	G100-B-SS	---
1-1/4"	G125-B-SS	---
1-1/2"	G150-B-SS	G150-B-ALSI
2"	G200-B-SS	G200-B-ALSI
2-1/2"	G250-B-SS	---
3"	G300-B-SS	G300-B-ALSI
4"	G400-B-SS	G400-B-ALSI
6"	G600-B-SS	---

[1] No standard exists for the 1/2" and 5", and generally these sizes do not interchange with other manufacturers' products.
[2] Supplied with stainless steel handles

Global Crimp Style Cam & Groove Type C

Coupler x Hose Shank

A380 permanent mold aluminum

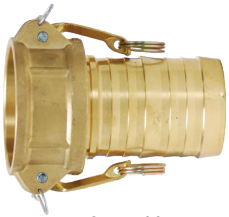

C38000 forged brass

316 investment cast stainless

Features

- All couplers are supplied with safety clips
- Couplers are supplied standard with a nitrile rubber gasket; other gasket types are available on pages 75-77
- Use global replacement handles only

Only use the crimp style shanks with the crimp style sleeves and ferrules.
Due to differences in dimensions and tolerances for safety reasons, do not interchange other manufacturers' products with Dixon products.

Hose I.D.	A380 Permanent Mold Aluminum Part #	C38000 Forged Brass Part #	316 Investment Cast Stainless Part #
1"	G100-C-ALCR	G100-C-BRCR	G100-C-SSCR
1-1/2"	G150-C-ALCR	G150-C-BRCR	G150-C-SSCR
2"	G200-C-ALCR	G200-C-BRCR	G200-C-SSCR
3"	G300-C-ALCR	G300-C-BRCR	G300-C-SSCR
4"	G400-C-ALCR	G400-C-BRCR	G400-C-SSCR
6"	G600-C-ALCR	---	G600-C-SSCR

Global Type C Couplers

Coupler x Hose Shank

Features

- Interchanges with all products produced to A-A-59326D
- Nitrile rubber seals are standard, other gaskets available on pages 75-77

Size	A380 Permanent Mold Aluminum with Brass Handles Part #	ASTM C38000 Forged Brass Part #
1/2"	G50-C-AL[1,2]	G50-C-BR[1,2]
3/4"	G75-C-AL[2]	G75-C-BR[2]
1"	G100-C-AL[2]	G100-C-BR[2]
1-1/4"	G125-C-AL	G125-C-BR
1-1/2"	G150-C-AL	G150-C-BR
2"	G200-C-AL	G200-C-BR
2-1/2"	G250-C-AL	G250-C-BR
3"	G300-C-AL	G300-C-BR
4"	G400-C-AL	G400-C-BR
5"	G500-C-AL[1]	G500-C-BR[1]
6"	G600-C-AL	---
8"	G800-C-AL[1]	---

Size	316 Investment Cast Stainless Steel Part #	A380 Permanent Mold Aluminum with Investment Stainless Handles Part #
1/2"	G50-C-SS[1]	---
3/4"	G75-C-SS	---
1"	G100-C-SS	---
1-1/4"	G125-C-SS	---
1-1/2"	G150-C-SS	G150-C-ALSI
2"	G200-C-SS	G200-C-ALSI
2-1/2"	G250-C-SS	---
3"	G300-C-SS	G300-C-ALSI
4"	G400-C-SS	G400-C-ALSI
6"	G600-C-SS	---

316 investment cast stainless steel

[1] No standard exists for the 1/2", 5", and 8", and generally these sizes do not interchange with other manufacturers' products.

[2] Supplied with stainless steel handles

Global Type D Couplers

Coupler x Female NPT

Features

- Interchanges with all products produced to A-A-59326D
- Nitrile rubber seals are standard, other gaskets available on pages 75-77

Size	A380 Permanent Mold Aluminum with Brass Handles Part #	ASTM C38000 Forged Brass Part #
1/2"	G50-D-AL[1, 2]	G50-D-BR[1, 2]
3/4"	G75-D-AL[2]	G75-D-BR[2]
1"	G100-D-AL[2]	G100-D-BR[2]
1-1/4"	G125-D-AL	G125-D-BR
1-1/2"	G150-D-AL	G150-D-BR
2"	G200-D-AL	G200-D-BR
2-1/2"	G250-D-AL	G250-D-BR
3"	G300-D-AL	G300-D-BR
4"	G400-D-AL	G400-D-BR
5"	G500-D-AL[1]	G500-D-BR[1]
6"	G600-D-AL	---

316 investment cast stainless steel

Size	316 Investment Cast Stainless Steel Part #	A380 Permanent Mold Aluminum with Investment Stainless Handles Part #
1/2"	G50-D-SS[1]	---
3/4"	G75-D-SS	---
1"	G100-D-SS	---
1-1/4"	G125-D-SS	---
1-1/2"	G150-D-SS	G150-D-ALSI
2"	G200-D-SS	G200-D-ALSI
2-1/2"	G250-D-SS	---
3"	G300-D-SS	G300-D-ALSI
4"	G400-D-SS	G400-D-ALSI
6"	G600-D-SS	---

[1] No standard exists for the 1/2" and 5", and generally these sizes do not interchange with other manufacturers' products.
[2] Stainless steel handles

Global Crimp Style Cam & Groove Type E

Adapter x Hose Shank

A380 permanent mold aluminum

C38000 forged brass

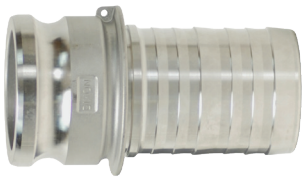

316 investment cast stainless

Only use the crimp style shanks with the crimp style sleeves and ferrules.
Due to differences in dimensions and tolerances for safety reasons, do not interchange other manufacturers' products with Dixon® products. Pressure rating is based on the seal of the mating part.

Hose I.D.	A380 Permanent Mold Aluminum Part #	C38000 Forged Brass Part #	316 Investment Cast Stainless Steel Part #
1"	G100-E-ALCR	G100-E-BRCR	G100-E-SSCR
1-1/2"	G150-E-ALCR	G150-E-BRCR	G150-E-SSCR
2"	G200-E-ALCR	G200-E-BRCR	G200-E-SSCR
3"	G300-E-ALCR	G300-E-BRCR	G300-E-SSCR
4"	G400-E-ALCR	G400-E-BRCR	G400-E-SSCR
6"	G600-E-ALCR	---	G600-E-SSCR

Global Type E Adapters

Adapter x Hose Shank

Features

- Interchanges with all products produced to A-A-59326D
- Pressure rating for adapters is based on the seal of the mating part

Size	A380 Permanent Mold Aluminum Part #	ASTM C38000 Forged Brass Part #	316 Investment Cast Stainless Steel Part #
1/2"	G50-E-AL[1]	G50-E-BR[1]	G50-E-SS[1]
3/4"	G75-E-AL	G75-E-BR	G75-E-SS
1"	G100-E-AL	G100-E-BR	G100-E-SS
1-1/4"	G125-E-AL	G125-E-BR	G125-E-SS
1-1/2"	G150-E-AL	G150-E-BR	G150-E-SS
2"	G200-E-AL	G200-E-BR	G200-E-SS
2-1/2"	G250-E-AL	G250-E-BR	G250-E-SS
3"	G300-E-AL	G300-E-BR	G300-E-SS
4"	G400-E-AL	G400-E-BR	G400-E-SS
5"	G500-E-AL[1]	G500-E-BR[1]	---
6"	G600-E-AL	---	G600-E-SS
8"	G800-E-AL[1]	---	---

[1] No standard exists for the 1/2", 5" and 8", and generally these sizes do not interchange with other manufacturers' products.

A380 permanent mold aluminum

Global Type F Adapters

Adapter x Male NPT

Features

- Interchanges with all products produced to A-A-59326D
- Pressure rating for adapters is based on the seal of the mating part

Size	A380 Permanent Mold Aluminum Part #	ASTM C38000 Forged Brass Part #	316 Investment Cast Stainless Steel Part #
1/2"	G50-F-AL[1]	G50-F-BR[1]	G50-F-SS[1]
3/4"	G75-F-AL	G75-F-BR	G75-F-SS
1"	G100-F-AL	G100-F-BR	G100-F-SS
1-1/4"	G125-F-AL	G125-F-BR	G125-F-SS
1-1/4"	G150-F-AL	G150-F-BR	G150-F-SS
2"	G200-F-AL	G200-F-BR	G200-F-SS
2-1/2"	G250-F-AL	G250-F-BR	G250-F-SS
3"	G300-F-AL	G300-F-BR	G300-F-SS
4"	G400-F-AL	G400-F-BR	G400-F-SS
5"	G500-F-AL[1]	G500-F-BR[1]	---
6"	G600-F-AL	---	G600-F-SS

[1] No standard exists for the 1/2" and 5", and generally these sizes do not interchange with other manufacturers' products.

ASTMC38000 forged brass

Global Type DC Dust Caps

A380 permanent mold aluminum

Features

- Interchanges with all products produced to A-A-59326D
- Nitrile rubber seals are standard, other gaskets available on pages 75-77
- Dust caps and dust plugs are not to be used in pressure applications for safety and environmental reasons

Size	A380 Permanent Mold Aluminum with Brass Handles Part #	ASTM C38000 Forged Brass Part #
1/2"	G50-DC-AL[1, 2]	G50-DC-BR[1, 2]
3/4"	G75-DC-AL[2]	G75-DC-BR[2]
1"	G100-DC-AL[2]	G100-DC-BR[2]
1-1/4"	G125-DC-AL	G125-DC-BR
1-1/2"	G150-DC-AL	G150-DC-BR
2"	G200-DC-AL	G200-DC-BR
2-1/2"	G250-DC-AL	G250-DC-BR
3"	G300-DC-AL	G300-DC-BR
4"	G400-DC-AL	G400-DC-BR
5"	G500-DC-AL[1]	G500-DC-BR[1]
6"	G600-DC-AL	---

Size	316 Investment Cast Stainless Steel Part #	A380 Permanent Mold Aluminum with Investment Stainless Handles Part #
1/2"	G50-DC-SS[1]	---
3/4"	G75-DC-SS	---
1"	G100-DC-SS	---
1-1/4"	G125-DC-SS	---
1-1/2"	G150-DC-SS	G150-DC-ALSI
2"	G200-DC-SS	G200-DC-ALSI
2-1/2"	G250-DC-SS	---
3"	G300-DC-SS	G300-DC-ALSI
4"	G400-DC-SS	G400-DC-ALSI
6"	G600-DC-SS	---

[1] No standard exists for the 1/2" and 5", and generally these sizes do not interchange with other manufacturers' products.

[2] Stainless steel handles

Global Type DP Dust Plugs

A380 permanent mold aluminum

Features

- Interchanges with all products produced to A-A-59326D
- Dust caps and dust plugs are not to be used in pressure applications for safety and environmental reasons

Size	A380 Permanent Mold Aluminum Part #	ASTM C38000 Forged Brass Part #	316 Investment Cast Stainless Steel Part #
1/2"	G50-DP-AL[1]	G50-DP-BR[1]	G50-DP-SS[1]
3/4"	G75-DP-AL	G75-DP-BR	G75-DP-SS
1"	G100-DP-AL	G100-DP-BR	G100-DP-SS
1-1/4"	G125-DP-AL	G125-DP-BR	G125-DP-SS
1-1/2"	G150-DP-AL	G150-DP-BR	G150-DP-SS
2"	G200-DP-AL	G200-DP-BR	G200-DP-SS
2-1/2"	G250-DP-AL	G250-DP-BR	G250-DP-SS
3"	G300-DP-AL	G300-DP-BR	G300-DP-SS
4"	G400-DP-AL	G400-DP-BR	G400-DP-SS
5"	G500-DP-AL[1]	G500-DP-BR[1]	---
6"	G600-DP-AL	---	G600-DP-SS

[1] No standard exists for the 1/2" and 5", and generally these sizes do not interchange with other manufacturers' products.

Global Type DA Jump Size Couplings

Coupler x Adapter

Features
- Interchanges with all products produced to A-A-59326D
- Nitrile rubber seals standard, other gaskets available on pages 75-77
- Pressure rating for adapters is based on the seal of the mating part

Size	A380 Permanent Mold Aluminum Part #	316 Investment Cast Stainless Steel Part #
2" x 3"	G2030-DA-AL	---
3" x 2"	G3020-DA-AL	G3020-DA-SS
3" x 4"	G3040-DA-AL	---
4" x 3"	G4030-DA-AL	G4030-DA-SS
5" x 4"	G5040-DA-AL	---
6" X 4"	G6040-DA-AL	---

A380 permanent mold aluminum

Global Type AA Spool Adapters

Adapter x Adapter

Features
- Interchanges with all products produced to A-A-59326D
- Pressure rating for adapters is based on the seal of the mating part

Size	A380 Permanent Mold Aluminum Part #	316 Investment Cast Stainless Steel Part #
1"	G100-AA-AL	---
1-1/2"	G150-AA-AL	G150-AA-SS
1-1/2" x 2"	G1520-AA-AL	---
2"	G200-AA-AL	G200-AA-SS
2" x 3"	G2030-AA-AL	G2030-AA-SS
3"	G300-AA-AL	G300-AA-SS
3" x 4"	G3040-AA-AL	---
4"	G400-AA-AL	G400-AA-SS

A380 permanent mold aluminum

A380 permanent mold aluminum

Global Type DD Couplers

Coupler x Coupler

Features
- Interchanges with all products produced to A-A-59326D
- Nitrile rubber seals standard, other gaskets available on pages 75-77

Size	A380 Permanent Mold Aluminum Part #	316 Investment Cast Stainless Steel Part #
2"	G200-DD-AL	G200-DD-SS
3"	G300-DD-AL	G300-DD-SS
4"	G400-DD-AL	G400-DD-SS

A380 permanent mold aluminum

Global Type A Jump Size Adapters

Adapter x Female NPT

Features
- Interchanges with all products produced to A-A-59326D
- Pressure rating for adapters is based on the seal of the mating part

Size	A380 Permanent Mold Aluminum Part #
3" x 2"	G3020-A-AL
4" x 3"	G4030-A-AL

Global Type C Jump Size Couplers

Coupler x Hose shank

Features
- Interchanges with all products produced to A-A-59326D
- Nitrile rubber seals standard, other gaskets available on pages 75-77

Size	A380 Permanent Mold Aluminum Part #
3" x 2"	G3020-C-AL
4" x 3"	G4030-C-AL

Global Type E Jump Size Adapters

Adapter x Hose Shank

Features
- Interchanges with all products produced to A-A-59326D
- Pressure rating for adapters is based on the seal of the mating part

Size	A380 Permanent Mold Aluminum Part #
3" x 2"	G3020-E-AL
4" x 3"	G4030-E-AL

Global Adapter x TTMA Flange

Features
- Interchange with all products produced to A-A-59326D
- Pressure rating for adapters is based on the seal of the mating part

Size	356T6 Aluminum Part #
4"	G400-ALT-AL

Global Coupler x TTMA Flange

Features
- Interchanges with all products produced to A-A-59326D
- Nitrile rubber seals standard, other gaskets available on pages 75-77

Size	356T6 Aluminum Part #
4"	G400-DLT-AL

NOTE: For flange dimensions, diagrams, and additional information, please reference dixonvalve.com.

Global Adapter x ANSI Flange

Size	Aluminum Part #
4"	G400-AL-AL
6"	G600-AL-AL

Global Coupler x ANSI Flange

Feature
- Nitrile rubber seals are standard

Size	Aluminum Part #
4"	G400-DL-AL
6"	G600-DL-AL

Handles for Aluminum / Brass Global Couplers

Feature
- Supplied complete with ring and pin

Fits on sizes	Investment Stainless Part #
1/2", 3/4"	G75HRP
1"	G100HRP
1-1/2", 2"	G152HRPSI
3" - 5"	G34HRPSI
6"	G600HRPSI

Fits on sizes	Forged Brass Part #
1-1/4" - 2-1/2"	G152HRP
3" - 5"	G34HRP
6", 8"	G600HRP

NOTE: Global Dixon® handle assemblies are to only be used with global Dixon parts (not domestic). Handles do not interchange with other manufacturers' handles or couplers.

Handles for Stainless Global Couplers

Feature
- Supplied complete with ring and pin

Fits on sizes	Investment Stainless Part #
1/2", 3/4"	G75HRPSS
1"	G100HRPSS
1-1/4" - 2-1/2"	G125250HRPSS
3" - 5"	G300400HRPSS
6"	G600HRPSS

NOTE: Global Dixon handle assemblies are to only be used with global Dixon parts (not domestic). Handles do not interchange with other manufacturers' handles or couplers.

Safety Clip for Global Couplers

Zinc Plated Carbon Steel Part #	Bag Qty
GSAFETYCLIP	25

Global BSP Thread Cam & Groove

Features
- Interchanges with products produced to A-A-59326D
- Pressure rating for adapters is based on the seal of the mating part
- Couplers: nitrile rubber seal is standard, others available on pages 75-77

Type A - Adapter x Female BSPP

Size	316 Investment Cast Stainless Steel Part #
1-1/2"	G150-A-SSBSP
2"	G200-A-SSBSP

Type B - Coupler x Male BSPT

Size	316 Investment Cast Stainless Steel Part #
1-1/2"	G150-B-SSBSP
2"	G200-B-SSBSP

Type D - Coupler x Female BSPP

Size	316 Investment Cast Stainless Steel Part #
1-1/2"	G150-D-SSBSP
2"	G200-D-SSBSP

Type F - Adapter x Male BSPT

Size	316 Investment Cast Stainless Steel Part #
1-1/2"	G150-F-SSBSP
2"	G200-F-SSBSP

Cam & Groove x NST

Features
- Powder coated aluminum adapter
- For suction and low pressure discharge only
- Other sizes, configurations, and materials available; contact Dixon® for information

Type A x Female NST (NH)

Adapter Size	Female NST (NH)Thread	Aluminum Part #
1-1/2"	1-1/2"	G150-A-ALNST
2-1/2"	2-1/2"	G250-A-ALNST
3"	2-1/2"	3025-A-ALNST

Type B x Male NST (NH)

Feature
- Nitrile rubber seals standard

Coupler Size	Male NST (NH)Thread	Aluminum Part #
1-1/2"	1-1/2"	G150-B-ALNST
2"	1-1/2"	2015-B-ALNST
2-1/2"	2-1/2"	G250-B-ALNST
3"	2-1/2"	3025-B-ALNST

Type D x Female NST (NH)

Feature
- Nitrile rubber seals standard

Coupler Size	Female NST (NH) Thread	Aluminum Part #
1-1/2"	1-1/2"	G150-D-ALNST
2"	2-1/2"	2025-D-ALNST
2-1/2"	2-1/2"	G250-D-ALNST
3"	2-1/2"	3025-D-ALNST

Type F x Male NST (NH)

Adapter Size	Male NST (NH) Thread	Aluminum Part #
1-1/2"	1-1/2"	G150-F-ALNST
2"	2-1/2"	2025-F-ALNST
2-1/2"	2-1/2"	G250-F-ALNST
3"	2-1/2"	3025-F-ALNST

Type A Adapters

Adapter x Female NPT

Features

- 1/2" couplers and adapters will interchange with 3/4" couplers and adapters, only the threads and barbs are 1/2"
- 1-1/4" couplers and adapters will interchange with 1-1/2" couplers and adapters, only the threads and barbs are 1-1/4"
- NOT recommended for use with PTFE gaskets, polypropylene cam & groove should not be mixed with metal fittings

Specification

- Maximum operating pressure: **125 PSI** (1/2" - 1"), **100 PSI** (1-1/4" - 2"), **60 PSI** (3"), and **50 PSI** (4"); recommendations based on the use of mating Dixon® fittings at an ambient temperature of **70°F (21°C)** with standard seal installed

Size	Glass-Filled Polypropylene Part #	Optional Qty
3/4" x 1/2"	PPA50	24
3/4"	PPA75	24
1"	PPA100	24
1-1/2" x 1-1/4"	PPA125	24
1-1/2"	PPA150	24
2"	PPA200	24
3"	PPA300	24
4"	PPA400	8

Type B Couplers

Coupler x Male NPT

Features

- Supplied with EPDM gaskets, 304 stainless steel handles and pins
- 1/2" couplers and adapters will interchange with 3/4" couplers and adapters, only the threads and barbs are 1/2"
- 1-1/4" couplers and adapters will interchange with 1-1/2" couplers and adapters, only the threads and barbs are 1-1/4"
- Replacements: gasket use EPR on page 75, key rings use R200SS on page 78, safety clip use GSAFETYCLIP
- NOT recommended for use with PTFE gaskets. Polypropylene cam & groove should not be mixed with metal fittings

Specification

- Maximum operating pressure: **125 PSI** (1/2" - 1"), **100 PSI** (1-1/4" - 2"), **60 PSI** (3"), and **50 PSI** (4"); recommendations based on the use of mating Dixon fittings at an ambient temperature of **70°F (21°C)** with standard seal installed

Size	Glass-Filled Polypropylene Part #	Optional Qty
3/4" x 1/2"	PPB50	24
3/4"	PPB75	24
1"	PPB100	24
1-1/2" x 1-1/4"	PPB125	24
1-1/2"	PPB150	24
2"	PPB200	24
3"	PPB300	24
4"	PPB400[1]	8

[1] 4" coupler has 4 handles

Type C Couplers

Coupler x Hose Shank

Features

- Supplied with EPDM gaskets, 304 stainless steel handles and pins
- 1/2" couplers and adapters will interchange with 3/4" couplers and adapters, only the threads and barbs are 1/2"
- 1-1/4" couplers and adapters will interchange with 1-1/2" couplers and adapters, only the threads and barbs are 1-1/4"
- Replacements: gasket use EPR on page 75, key rings use R200SS on page 78, safety clip use GSAFETYCLIP
- NOT recommended for use with PTFE gaskets, polypropylene cam & groove should not be mixed with metal fittings.

Specification

- Maximum operating pressure: **125 PSI** (1/2" - 1"), **100 PSI** (1-1/4" - 2"), **60 PSI** (3"), and **50 PSI** (4"); recommendations based on the use of mating Dixon® fittings at an ambient temperature of **70°F (21°C)** with standard seal installed

Size	Glass-Filled Polypropylene Part #	Optional Qty
3/4" x 1/2"	PPC50	24
3/4"	PPC75	24
1"	PPC100	24
1-1/2" x 1-1/4"	PPC125	24
1-1/2"	PPC150	24
2"	PPC200	24
3"	PPC300	24
4"	PPC400[1]	8

[1] 4" coupler has 4 handles

Type D Couplers

Coupler x Female NPT

Features

- Supplied with EPDM gaskets, 304 stainless steel handles and pins
- 1/2" couplers and adapters will interchange with 3/4" couplers and adapters, only the threads and barbs are 1/2"
- 1-1/4" couplers and adapters will interchange with 1-1/2" couplers and adapters, only the threads and barbs are 1-1/4"
- Replacements: gasket use EPR on page 75, key rings use R200SS on page 78, safety clip use GSAFETYCLIP
- NOT recommended for use with PTFE gaskets, polypropylene cam & groove should not be mixed with metal fittings

Specification

- Maximum operating pressure: **125 PSI** (1/2" - 1"), **100 PSI** (1-1/4" - 2"), **60 PSI** (3"), and **50 PSI** (4"); recommendations based on the use of mating Dixon fittings at an ambient temperature of **70°F (21°C)** with standard seal installed

Size	Glass-Filled Polypropylene Part #	Optional Qty
3/4" x 1/2"	PPD50	24
3/4"	PPD75	24
1"	PPD100	24
1-1/2" x 1-1/4"	PPD125	24
1-1/2"	PPD150	24
2"	PPD200	24
3"	PPD300	24
4"	PPD400[1]	8

[1] 4" coupler has 4 handles

Type E Adapters

Adapter x Hose Shank

Features

- 1/2" couplers and adapters will interchange with 3/4" couplers and adapters, only the threads and barbs are 1/2"
- 1-1/4" couplers and adapters will interchange with 1-1/2" couplers and adapters, only the threads and barbs are 1-1/4"
- NOT recommended for use with PTFE gaskets, polypropylene cam & groove should not be mixed with metal fittings

Specification

- Maximum operating pressure: **125 PSI** (1/2" - 1"), **100 PSI** (1-1/4" - 2"), **60 PSI** (3"), and **50 PSI** (4"); recommendations based on the use of mating Dixon® fittings at an ambient temperature of **70°F (21°C)** with standard seal installed

Size	Glass-Filled Polypropylene Part #	Optional Qty
3/4" x 1/2"	PPE50	24
3/4"	PPE75	24
1"	PPE100	24
1-1/2" x 1-1/4"	PPE125	24
1-1/2"	PPE150	24
2"	PPE200	24
3"	PPE300	24
4"	PPE400	8

Type F Adapters

Adapter x Male NPT

Features

- 1/2" couplers and adapters will interchange with 3/4" couplers and adapters, only the threads and barbs are 1/2"
- 1-1/4" couplers and adapters will interchange with 1-1/2" couplers and adapters, only the threads and barbs are 1-1/4"
- NOT recommended for use with PTFE gaskets, polypropylene cam & groove should not be mixed with metal fittings

Specification

- Maximum operating pressure: **125 PSI** (1/2" - 1"), **100 PSI** (1-1/4" - 2"), **60 PSI** (3"), and **50 PSI** (4"); recommendations based on the use of mating Dixon fittings at an ambient temperature of **70°F (21°C)** with standard seal installed

Size	Glass-Filled Polypropylene Part #	Optional Qty
3/4" x 1/2"	PPF50	24
3/4"	PPF75	24
1"	PPF100	24
1-1/2" x 1-1/4"	PPF125	24
1-1/2"	PPF150	24
2"	PPF200	24
3"	PPF300	24
4"	PPF400	8

Dust Caps and Plugs

Features

- Dust caps and dust plugs are not to be used in pressure applications for safety and environmental reasons
- NOT recommended for use with PTFE gaskets. Polypropylene cam & groove should not be mixed with metal fittings
- Supplied with EPDM gaskets, 304 stainless steel handles and pins
- Replacements: gasket use EPR on page 75, key rings use R200SS on page 78, safety clip use GSAFETYCLIP

3/4" - 3"

4"

Type H Dust Caps

Size	Glass-Filled Polypropylene Part #	Optional Qty
3/4"	PPH75	24
1"	PPH100	24
1-1/2"	PPH150	24
2"	PPH200	24
3"	PPH300	24
4"	PPH400[1]	8

[1] 4" coupler has 4 handles

3/4" - 3"

4"

Type P Dust Plugs

Size	Glass-Filled Polypropylene Part #	Optional Qty
3/4"	PPP75	24
1"	PPP100	24
1-1/2"	PPP150	24
2"	PPP200	24
3"	PPP300	24
4"	PPP400	8

Type A 90° Elbows
Adapter x Female NPT

Features
- For use at elevated temperatures or other unusual operating conditions, consult Dixon
- NOT recommended for use with PTFE gaskets, polypropylene cam & groove should not be mixed with metal fittings

Specification
- Maximum operating pressure: **100 PSI** (1-1/2" - 2"); recommendations based on the use of mating Dixon® fittings at an ambient temperature of **70°F (21°C)** with standard seal installed

Size	Glass-Filled Polypropylene Part #	Optional Qty
1-1/2"	90PPA150	24
2"	90PPA200	24

Type C 90° Elbows
Coupler x Hose Shank

Features
- Supplied with EPDM gaskets, 304 stainless steel handles and pins
- For use at elevated temperatures or other unusual operating conditions, consult Dixon
- NOT recommended for use with PTFE gaskets, polypropylene cam & groove should not be mixed with metal fittings

Specification
- Maximum operating pressure: **100 PSI** (1-1/2" - 2"); recommendations based on the use of mating Dixon fittings at an ambient temperature of **70°F (21°C)** with standard seal installed

Size	Glass-Filled Polypropylene Part #	Optional Qty
1-1/2"	90PPC150	24
2"	90PPC200	24

Type D 90° Elbows
Coupler x Female NPT

Features
- Supplied with EPDM gaskets, 304 stainless steel handles and pins
- For use at elevated temperatures or other unusual operating conditions, consult Dixon
- NOT recommended for use with PTFE gaskets, polypropylene cam & groove should not be mixed with metal fittings

Specification
- Maximum operating pressure: **100 PSI** (1-1/2" - 2"); recommendations based on the use of mating Dixon fittings at an ambient temperature of **70°F (21°C)** with standard seal installed

Size	Glass-Filled Polypropylene Part #	Optional Qty
1-1/2"	90PPD150	24
2"	90PPD200	24

Type F 90° Elbows
Adapter x Male NPT

Features
- For use at elevated temperatures or other unusual operating conditions, consult Dixon
- NOT recommended for use with PTFE gaskets, polypropylene cam & groove should not be mixed with metal fittings

Specification
- Maximum operating pressure: **100 PSI** (1-1/2" - 2"); recommendations based on the use of mating Dixon fittings at an ambient temperature of **70°F (21°C)** with standard seal installed

Size	Glass-Filled Polypropylene Part #	Optional Qty
1-1/2"	90PPF150	24
2"	90PPF200	24

Railroad Tank Car Connections

Features
- All swivel nuts have standard 5" Railroad Tank Car thread
- Supplied with a nitrile rubber gasket in the threaded end, other gaskets available on page 100

Style A

Male Adapter	Swivel Nut	Elbow	316 Stainless Steel Part #	Aluminum Part #
3"	5"	120°	RTCA30	---
4"	5"	110°	RTCA40[1]	ATCA40

[1] Parts are produced as a welded fabrication

NOTE: Stainless steel railroad tank car connections are not compatible with aluminum and brass.

Style F

Features
- 4" TTMA flange can be bolted to sight glass; API adapter or other dry disconnect
- Supplied with PTFE nitrile rubber envelope gasket

TTMA Flange	Swivel Nut	Elbow	Aluminum Part #
4"	5"	110°	ATCF40[1]
	5"	90°	ATCF40-90[1]

[1] Part is produced as a welded fabrication

NOTE: For flange dimensions, diagrams, and additional information, please reference dixonvalve.com.

110° elbow

Style GF

Feature
- 4" TTMA flange can be bolted to sight glass; API adapter or other dry disconnect

TTMA Flange	Boss-lock Coupler	Elbow	Aluminum Part #
4"	4"	110°	ATCGF40
	4"	90°	ATCGF40-90

NOTE: For flange dimensions, diagrams, and additional information, please reference dixonvalve.com.

110° elbow

Screen

Features
- Stainless steel screen encapsulated in a nitrile rubber gasket
- For use in Style GF elbows

Size	Hole Size	316L Stainless Steel Part #
4"	1"	400-G-BUSS

Railroad Tank Car Connections

Style T

Male NPT	Swivel Nut	Elbow	Iron Part #	Aluminum Part #
3"	5"	120°	TCT30	ATCT30
4"	5"	110°	TCT40	ATCT40

Style T

Male NPT	Swivel Nut	Elbow	316 Stainless Steel Part #
3"	5"	120°	RTCT30
4"	5"	110°	RTCT40

NOTE: Components that make up these assemblies are not interchangeable between stainless steel and the other materials.

Dixon® Coupler x Tank Car Thread

Features
- Part is produced as a welded fabrication
- Coupler supplied with a nitrile rubber gasket, other gaskets available on pg. 75
- Use Dixon replacement handles only

Coupler	Male Tank Car Thread	Aluminum Part #
4"	5"	400DWX5TC

EZ Boss-Lock x Coupler Tank Car Thread

Features
- Part is produced as a welded fabrication
- Coupler supplied with a nitrile rubber gasket, other gaskets available on pg. 75
- Use EZ Boss-Lock replacement handles only

Coupler	Male Tank Car Thread	Aluminum Part #
4"	5"	AD400ALEZMTC

Railroad Unloading Assemblies

Features
- Robust aluminum body construction
- Removable, easy-carry handle
- Safe and reliable - valves will not open unless fittings are properly connected
- Multiple configurations available; consult Dixon® for pricing and availability

Assembly with Dixon MannTek Dry Disconnect Adapter

Adapter Size	Swivel Nut Size	Aluminum Part #
4"	5"	ATC40ASSDDA

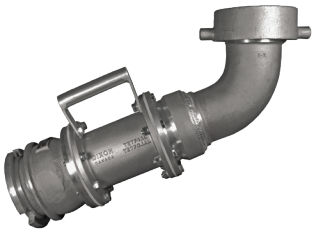

Assembly with API Adapter

Feature
- Stainless steel springs on the adapter and coupler for corrosion resistance

Adapter Size	Swivel Nut Size	Aluminum Part #
4"	5"	ATC40ASSAPI

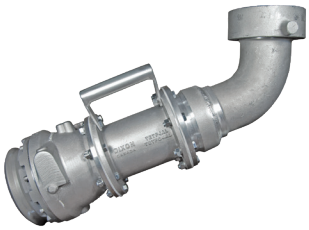

Dixon Tank Car Adapters

Features:
- Standard 5" Railroad Tank Car thread
- Supplied with a nitrile rubber gasket in the threaded end; see next page for more gaskets

Size	356T6 Aluminum Part #	Brass Part #	Iron Part #	316 Stainless Steel Part #
2"	200-TCA-AL	---	---	200-TCA-SS
3"	300-TCA-AL	300-TCA-BR	---	300-TCA-SS
4"	400-TCA-AL	400-TCA-BR	---	400-TCA-SS

NOTE: Stainless steel adapters are not compatible with the aluminum and brass adapters.

rocker lug

pin lug

45° Swivel

Features
- Standard 5" Railroad Tank Car thread
- 45° tank car swivel adapter
- Unit has a long handle brass swivel nut and a swivel retaining ring
- Supplied with a nitrile rubber gasket in the threaded end; see next page for more gaskets

Size	356T6 Aluminum Part #
4"	40A-45TCAL

NOTE: 4" hose fittings for railroad tank car unloading can be found on pages 97-98

Railroad Tank Car Gaskets

Old Style

Feature

- For use with Dixon® fittings

Size	O.D.	I.D.	Thick	Leather Part #
5"	5-1/4"	3-1/2"	3/16"	G9

Standard

Feature

- For use with Dixon fittings

Size	O.D.	I.D.	Thick	Material	Part #
5"	5-1/4"	3-7/8"	1/8"	Nitrile rubber	500GTCABU
	5-1/4"	3-7/8"	1/8"	FKM-A	500GTCAVI
	5-1/4"	3-7/8"	1/8"	fuel grade nitrile rubber	500GTCABF
	5-5/16"	3-7/8"	3/16"	FKM-A	500GTCAVITHK

PTFE Envelope

Features

- For use with Dixon fittings
- May be too thick for insertion in some older Dixon fittings

Size	O.D.	I.D.	Thick	Material	Part #
5"	5-1/4"	3-13/16"	3/16"	PTFE with nitrile rubber filler	500GTCATF
	5-1/4"	3-13/16"	3/16"	PTFE with FKM filler	500GTCATV

Pin Lug Wrench

Feature

- Used on aluminum and iron tank car nuts

Iron Part #
G10

Limited Warranty

DIXON VALVE & COUPLING COMPANY, LLC (herein called "Dixon") warrants the products described herein and manufactured by Dixon to be free from defects in material and workmanship for a period of one (1) year from date of shipment by Dixon under normal use and service. Its sole obligation under this warranty being limited to repairing or replacing, as hereinafter provided, at its option any product found to Dixon's satisfaction to be defective upon examination by it, provided that such product shall be returned for inspection to Dixon's factory within three (3) months after discovery of the defect. The repair or replacement of defective products will be made without charge for parts or labor. This warranty shall not apply to: (a) parts or products not manufactured by Dixon, the warranty of such items being limited to the actual warranty extended to Dixon by its supplier; (b) any product that has been subject to abuse, negligence, accident, or misapplication; (c) any product altered or repaired by others than Dixon; and (d) normal maintenance services and the replacement of service items (such as washers, gaskets, and lubricants) made in connection with such services. To the extent permitted by law, this limited warranty shall extend only to the buyer and any other person reasonably expected to use or consume the goods who is injured in person by any breach of the warranty. No action may be brought against Dixon for an alleged breach of warranty unless such action is instituted within one (1) year from the date the cause of action accrues. This limited warranty shall be construed and enforced to the fullest extent allowable by applicable law.

Other than the obligation of Dixon set forth herein, Dixon disclaims all warranties, express or implied, including but not limited to any implied warranties of merchantability or fitness for a particular purpose, and any other obligation or liability. The foregoing constitutes Dixon's sole obligation with respect to damages, whether direct, incidental, or consequential, resulting from the use or performance of the product.

Some products and sizes may be discontinued when stock is depleted or may require a minimum quantity for ordering.

Limits of Liability

This brochure is intended as a product offering. It is not intended to be a user or technical manual. Information in this brochure is subject to change without notice. All users and distributors of products sold through this brochure should contact Dixon with questions of use, compatibilities, coupling procedures, and life of product. Our full-time engineering and test staff are always available to recommend uses and to assist distributors and users with any questions.

Safety

Safety logos, which appear throughout our catalog, are used as a reminder that the user should carefully review for the appropriateness of the product for the media, application, and environment in which it will be used.

NOTE: Because of the health hazards associated with contamination and lead content in drinking water systems, Dixon couplings, unless otherwise specifically approved, are not recommended for potable water service and should not be used in applications where drinking water will contact the wetted surfaces of the coupling.

All Dixon products are shipped in cartons with the following warning:
"**WARNING:** This product contains lead, a chemical known to the State of California to cause cancer and birth defects or other reproductive harm."

Trademark

Delrin® and Zytel® are registered trademarks of E.I. duPont Nemours and Company.

Kalrez® is a registered trademark of DuPont Dow Elastomers.

All other trademarks appearing in the Dixon illustrated product list are the property of their respective owners.

Copyright

Copyright © 2023 by Dixon Valve & Coupling Company, LLC

All rights reserved. This book is copyrighted material. Use, reproduction or copying of it by anyone other than Dixon® is strictly forbidden without its express written consent.

NOTE: Reasonable care has been taken in preparing this catalog. Dixon Valve & Coupling Company, LLC reserves the right to make corrections.

The Right Connection®

Dixon is recognized as the premier manufacturer and supplier of hose fittings and accessories spanning a wide range of industrial uses. Dixon's range includes products for food, dairy processing, beverage and brewery, mobile tankers, mining, construction, chemical processing, petroleum, oil fields, refining, and manufacturing.

Dixon Specialty Products

225 Talbot Blvd., Chestertown, MD 21620
Phone: 888.226.4673
Fax: 410.778.1958
Email: dspsales@dixonvalve.com

connect with us on

© 2023 DVCC

Printed in the USA

CAM&GROOVEBRO_0423