Domestic Hot Water Balancing Valve

RecircSetter™ | Thermostatic Balancing, Variable Set Point, Optional Check Valve, Actuated Thermal Disinfection, 150 CWP

TB-150G

TB-150G with Actuator
& Optional Check Valve

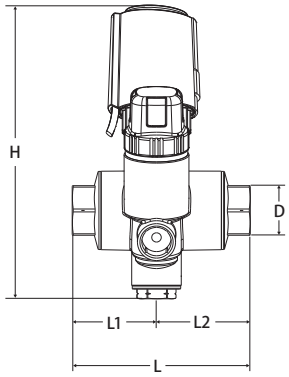

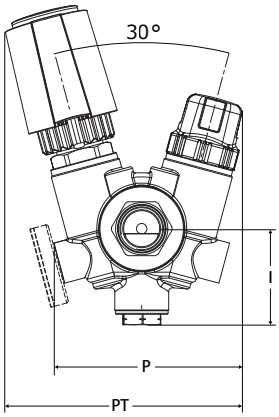

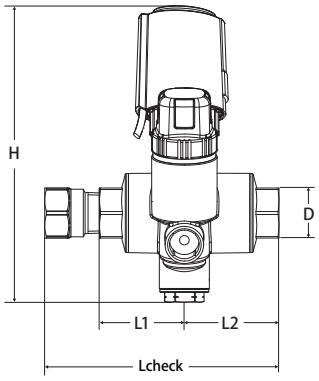

FEATURES

Dezincification Resistant Brass Alloy
Variable Temperature Set Point with Protective Cap
Modulates Flow to Maintain Constant Temperature in Recirculation Loop
No Balancing Equipment Required
Drywell with Temperature Gauge Included
1/2” NPT Temperature Port (Factory Plugged)
Optional Check Valve
Actuated Thermal Disinfection for use with BMS
100% Made in Italy
NSF 61 & NSF 372 Certified
Wetted Surfaces Contain Less than .25% Lead Content
Accessories Available

CERTIFICATIONS/APPROVALS

NSF/ANSI/CAN 61
NSF/ANSI/CAN 372
Conforms to ANSI B1.20.1

PRESSURE/TEMPERATURE RATING

Max Working Pressure: 232 psi
Max Differential Pressure: 14.5 psi
Max Working Temperature: 194°F
Temperature Setting Range: 95°F - 140°F
C_{vmin}: 0.23
C_{vmax}: 2.10
$C_{vdesign}$: 0.53 - 0.59
$C_{vdisinf*}$: 1.16

DIMENSIONS

Part No	D	L	L_{check}	L1	L2	H	I	P	PT
180-103G-A	1/2”	3.66	-	1.73	1.93	6.06	1.81	3.58	4.49
180-104G-A	3/4”	3.9	-	1.85	2.05	6.06	1.81	3.58	4.49
*180-103G-A-C	1/2”	-	4.8	1.73	1.93	6.06	1.81	3.58	4.49
*180-104G-A-C	3/4”	-	5.43	1.85	2.05	6.06	1.81	3.58	4.49

*TB-150G with Optional Check Valve

WARNING: This product can expose you to chemicals including lead, which is known to the State of California to cause cancer, birth defects or other reproductive harm.
For more information go to www.P65Warnings.ca.gov.

Material Specifications

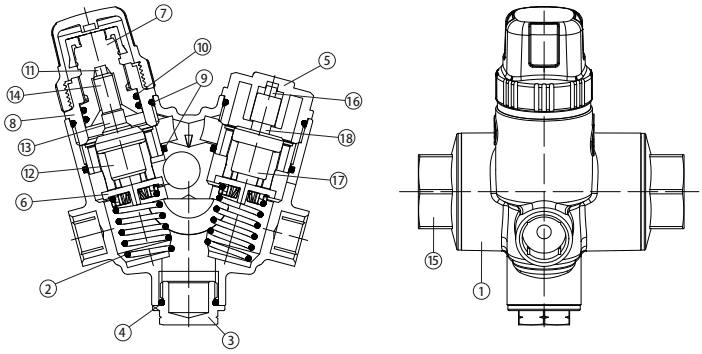

MATERIALS

No.	Part	Material
1	Valve Body	LF DZR Brass C27453
2	Spring	Stainless Steel AISI 302
3	1/2” Plug	LF DZR Brass C27453
4	O-Ring	EPDM
5	Auxiliary Cap	LF DZR Brass C27453
6	Piston	PSU
7	Stem	LF DZR Brass C27453
8	Stem Adapter	LF DZR Brass C27453
9	O-Ring	EPDM
10	O-Ring	EPDM
11	Cartridge Piston	Steel
12	Cartridge Cup	Brass C22000
13	Cartridge Guide	Brass C69300
14	Cartridge Sleeve	EPDM
15	End Connection FNPT	LF DZR Brass C27453
16	Axial Valve Body	LF DZR Brass C27453
17	Shut-Off Spring	Stainless Steel AISI 302
18	Shut-Off Stem	Stainless Steel AISI 304
19	Shut-Off Gasket	EPDM
20	Shut-Off Metal Plate	Brass CW614N
21	O-Ring	EPDM
22	O-Ring	EPDM

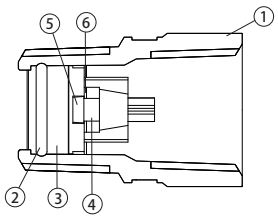

MATERIALS FOR TB-150G CHECK VALVE (OPTIONAL)

No.	Part	Material
1	Body	LF DZR Brass C27453
2	O-Ring	EPDM
3	Check Body	GF Noryl
4	Spring	Stainless Steel AISI 301
5	Check Rod Plunger	GF Noryl
6	Check Lip Seal	EPDM

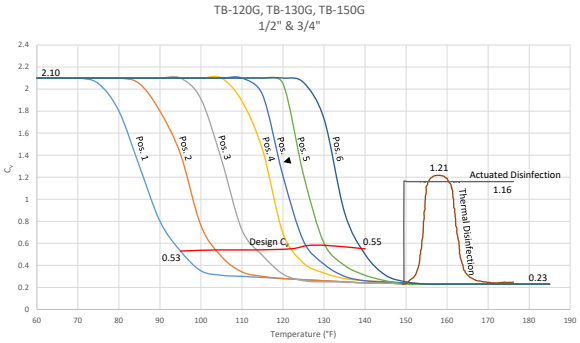

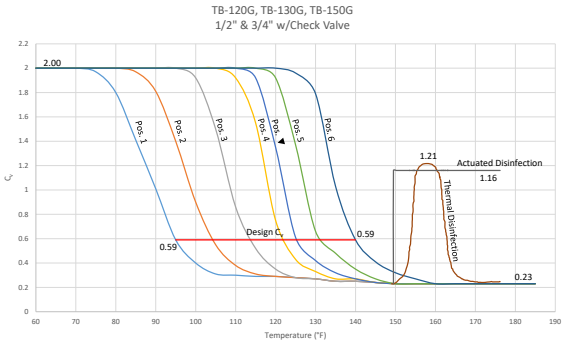

HAND WHEEL SETPOINT TEMPERATURE (°F)									
95°	100°	105°	110°	115°	120°	125°	130°	135°	140°
1	1.6	2.1	2.7	3.2	3.8	▼4.4	4.9	5.5	6

WARNING: This product can expose you to chemicals including lead, which is known to the State of California to cause cancer, birth defects or other reproductive harm. For more information go to www.P65Warnings.ca.gov.